Ezi-SERVO® Plus-R

Closed Loop Stepping System
with Network based Motion Controller

User Manual

Text

FASTECH

www.fastech.co.kr

- Table of Contents -

1. Safety Precautions 4

Manual Version : [ver05.01.03] 4

2.1 Characteristic Table 6

2.2 Dimensions 6

3. Specifications of the Motor 7

3.1 EzM-28 Series 7

3.2 EzM-42 Series 8

3.3 EzM-56 Series 9

3.4 EzM-60 Series 10

3.5 EzM-86 Series 11

4. Characteristics of Motor Torque 12

5. Configuration of the Controller 13

5.1 Combination of Motor and Drive 13

5.2 Controller Configurtion 14

5.3 External Wiring Diagram 15

6. External Name and Function Setting 17

6.1 Appearance and Part Name 17

6.2 Status Display LED 17

6.3 Drive ID Select Switch(SW1) 17

6.4 Communication Speed and Terminal Resistance Select Switch(SW2) 18

6.5 Motor Connector(CN3) 18

6.6 Encoder Connector(CN2) 18

6.7 Power Connector(CN4) 19

6.8 I/O Signal Connector(CN1) 19

6.9 Communication Connector(CN5) 20

7. Control I/O Signal 21

7.1 Signal Cabling 21

7.2 Connection Circuit 22

7.3 Input Signal 23
7.4 Output Signal 30
8. Operation 33
8.1 Power Supply Timing 33
8.2 Servo ON Operation 33
8.3 Operation Mode 33
9. Other Operation Functions 35
9.1 Position Table(PT) Operation Example 35
9.2 Jog Operation Example 35
9.3 Origin Return 36
9.4 Stop Operating 38
10. Communication Function 39
10.1 Connection with the PC 39
10.2 Communication Interface Circuit 40
11. Protective Function 41
11.1 Alarm Type 41
11.2 Acquiring Alarm Information 41
11.3 Alarm Release 42
12. Parameter 43
12.1 Parameter List 43
12.2 Encoder Setup 43
12.3 Parameter Description 44
Appendix 48

Manual Version : [ver05.01.03] Supported Firmware version : F05~ Supported Drive(DSP) software version : 5.01 ~ Supported GUI version : 5.0 ~ Fisrt Edition : Oct 02, 2008 Revised Edition : Aug 05, 2009

1. Safety Precautions

※ Before getting started ※

- Thank you for purchasing Ezi-SERVO of FASTECH, which is a full digital position control servo system with a 32bit high performance DSP.
- This manual describes handling, maintenance, repair, diagnosis, and troubleshooting of Ezi-SERVO.
- Before operating Ezi-SERVO, read this manual through.

1. Safety Precautions

◆ General Precautions

☞ Contents of this manual are subject to change without prior notice for functional improvement, change of specifications, or user's better understanding.

Thoroughly Read the manual provided with the purchased Ezi-SERVO.

☞ When the manual is damaged or lost, contact a FASTECH agent or the address on the last page of the manual.

☞ FASTECH is not responsible for a product breakdown due to user's dismantling the product, and such a breakdown is not covered by the warranty.

◆ Put the safety first

☞ Before installing, operating, and repairing the product, thoroughly read the manual and fully understand contents. Before operating the product, understand the mechanical characteristics of the product and related safety information and precautions.

☞ After reading the manual, keep the manual near the product so that any user can read the manual whenever needed.

☞ This manual divides safety precautions into 「Warning」 and 「Caution」.

Caution	If the user does improperly handle the product, the user may get seriously or slightly injured and damages may occur in the machine only.

Warning	If the user does improperly handle the product, a dangerous situation like an electric shock may occur resulting in death or serious injuries.

☞ Although the item mentioned is only Caution , a serious result may be caused depending on the situation. Necessarily follow safety precautions.

◆ The Status of the Product

Caution	☞ Check if the product is damaged or any component is omitted. When an abnormal product is installed and operated, the user may get injured.

◆ Install

Caution	☞ Carefully move the product. Dropping the product on the ground or the user's foot may cause an injury. ☞ Use non-flammable materials like metals in the place where the product is to be installed. Otherwise, a fire may occur. ☞ When installing several drives in a sealed place, install a cooling fan to keep the ambient temperature of the drive at 50℃ or lower. Otherwise, a fire or other kinds of accidents may occur due to overheating.

◆ Connecting Cables

Warning	☞ Before connecting cables, check if input power is off. Otherwise, an electric shock or a fire may occur. ☞ The case of the drive is insulated from the ground of the internal circuit by the condenser. Necessarily ground the driver. Otherwise, an electric shock or a fire may occur.

◆ Change of operation and setting

Caution	☞ All parameters of the drive were accordingly set at the factory. To change these parameters, read the manual first. Otherwise, the machine may be damaged or out of order.

◆ Repair and Check

Warning	☞ Stop supplying power to the main circuit, wait for a while, and then check or repair the drive. Electricity remaining in the condenser may cause any danger like an electric shock. ☞ Do not change cabling while power is being supplied. Otherwise, the user may get injured or the drive may get damaged. ☞ Do not remodel the drive. Otherwise, the user may receive an electric shock or the drive may get damaged. The damaged product is not covered by the warranty.

Notes on Installation

1) This product has been designed for indoor uses. The ambient temperature of the room should be 0℃~55℃.
2) If the temperature of the case is 50℃ or higher, radiate heat outside to cool down the case.
3) Do not install this product under direct rays or near magnetic or radioactive objects.
4) If more than 2 drives are installed in a line, keep the interval of 20mm or more vertically and 50mm or more horizontally.

2.Specifications of the Drive

2.1 Characteristic Table

Motor Model		EzM-28 series	EzM-42 series	EzM-56 series	EzM-60 series	EzM-86 series
Driver Model		EzS-NDR-28series	EzS-NDR-42series	EzS-NDR-56series	EzS-NDR-60series	EzS-NDR-86series
Input Voltage		24VDC ±10%	24VDC ±10%	24VDC ±10%	24VDC ±10%	40~70VDC
Control Method		Closed loop control with 32bit DSP				
Multi Axes Drive		Maximum 16 axes through Daisy-Chain				
Position Table		256 motion command steps(Continuous, Wait, Loop, Jump and External start etc,)				
Current Consumption		Max 500mA (Except motor current)				
Operating Condition	Ambient Temperature	In Use : 0~55℃ In Storage : -20~70℃				
	Humidity	In Use : 35~85% (Non-condensing) In Storage : 10~90% (Non-condensing)				
	Vib. Resist.	0.5G				
Function	Rotation Speed	0~3000rpm				
	Resolution(P/R)	2000/Rev. Encoder model : 500, 1000, 1600, 2000, 3600, 5000, 6400, 7200, 10000 10000/Rev. Encoder model : 500, 1000, 1600, 2000, 3600, 5000, 6400, 7200, 10000 16000/Rev. Encoder model : 500, 1000, 1600, 2000, 3600, 5000, 6400, 7200, 10000, 16000 20000/Rev. Encoder model : 500, 1000, 1600, 2000, 3600, 5000, 6400, 7200, 10000, 20000 32000/Rev. Encoder model : 500, 1000, 1600, 2000, 3600, 5000, 6400, 7200, 10000, 32000 (Selectable by parameter)				
	Protection Functions	Overcurrent, Overspeed, Stall error, Overload, Overheat, Overvoltage, Inposition error Motor disconnect, Encoder disconnet, Input low voltage				
	LED Display	Power status, Alarm status, In-Position status, Servo On status				
	In-Position Selection	0~15 (Selectable by parameter)				
	Position Gain Selection	0~15 (Selectable by parameter)				
	Rotational Direction	CW/CCW (Selectable by parameter)				
I/O Signal	Input Signals	3 dedicated input (LIMIT+, LIMIT-, ORIGIN), 9 programmable input (photocoupler)				
	Output Signals	1 dedicated output (Compare Out), 9 programmable output (photocoupler)				
Communication Interface		The RS-485 serial communication with PC Transmission speed : 9,600~230,400 [bps]				
Position Control		Incremental mode/Absolute mode Data range : -134,217,727 to +134,217,727[pulse], Operating speed : Max. 500[kpps]				
Return to Origin		Origin Sensor, Z phase, ±Limit sensor				
GUI		User Interface Program within Windows				
Software		Motion Library (DLL) for windows 2000/XP				

2.2 Dimensions

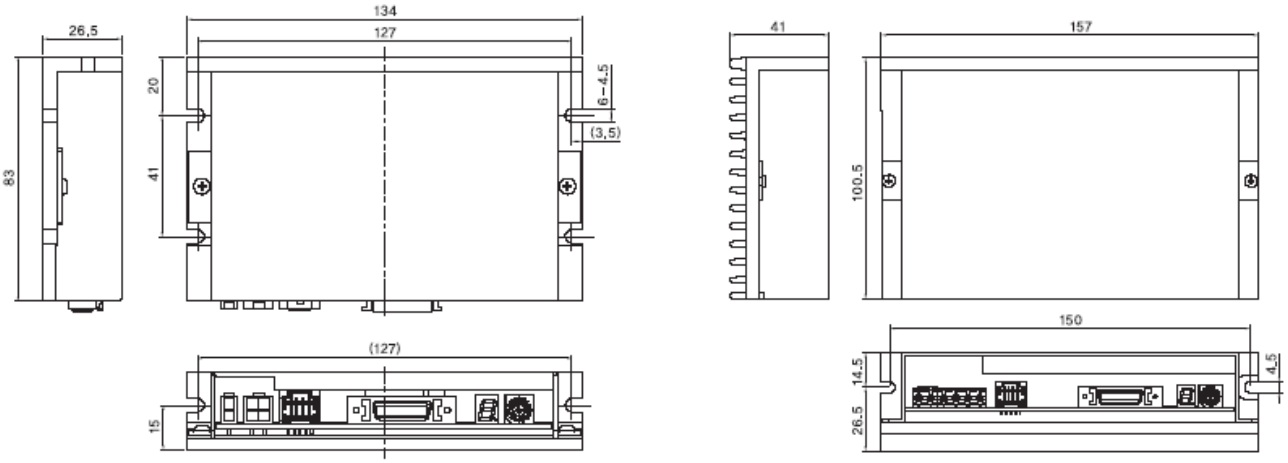

※Only for 86mm motor drive (EzS-NDR-86 series)

3. Specifications of the Motor

3.1 EzM-28 Series

1) Specifications

M O D E L		UNIT	EzM-28M-D	EzM-28M-E	EzM-28L-D	EzM-28L-E
DRIVE METHOD		——	BI-POLAR	BI-POLAR	BI-POLAR	BI-POLAR
NUMBER OF PHASES		——	2	2	2	2
VOLTAGE		VDC	3,0	2,5	3,0	3,5
CURRENT per PHASE		A	0,95	1,0	0,95	1,0
RESISTANCE per PHASE		Ohm	3,2	2,5	3,2	3,5
INDUCTANCE per PHASE		mH	2,5	1,6	2,8	2,3
HOLDING TORQUE		mN · m	120	51	140	100
ROTOR INTERTIA		g · ㎠	13	9	18	16
WEIGHTS		g	155	145	215	235
LENGTH(L)		mm	59,0	58,5	66,0	77,8
ALLOWABLE OVERHUNG LOAD (DISTANCE FROM END OF SHAFT)	3mm	N	30	30	30	30
	8mm		38	38	38	38
	13mm		53	53	53	53
	18mm		84	84	84	84
ALLOWABLE THRUST LOAD		N	Lower than MOTOR weight			
INSULATION RESISTANCE		Mohm	100min. (at 500VDC)			
DIELECTRIC STRENGTH		V/mm	500 (at 50Hz 1min.)			
TEMPERATURE CLASS		——	CLASS B (130℃)			
OPERATING TEMPERATURE		℃	0 to 55			
ALLOWABLE TEMPERATURE		℃	85Max			

2) Dimensions

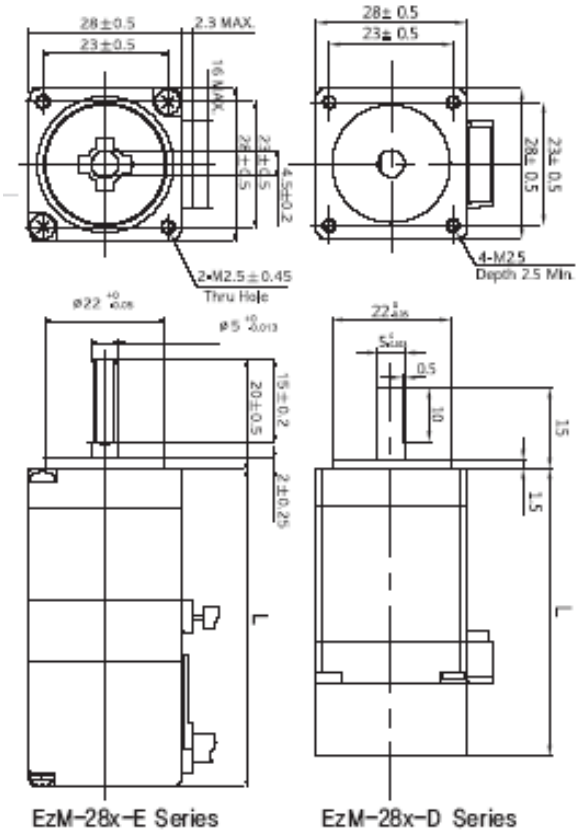

3.2 EzM-42 Series

1) Specifications

M O D E L		UNIT	EzM-42S-A EzM-42S-B EzM-42S-C	EzM-42M-A EzM-42M-B EzM-42M-C	EzM-42L-A EzM-42L-B EzM-42L-C	EzM-42XL-A EzM-42XL-B EzM-42XL-C
DRIVE METHOD		——	BI-POLAR	BI-POLAR	BI-POLAR	BI-POLAR
NUMBER OF PHASES		——	2	2	2	2
VOLTAGE		VDC	2.2	2.7	3.0	7.2
CURRENT per PHASE		A	1.5	1.5	1.5	1.2
RESISTANCE per PHASE		Ohm	1.47	1.83	2.0	6.0
INDUCTANCE per PHASE		mH	1,81	2,77	3,67	6,3
HOLDING TORQUE		mN · m	270	400	490	750
ROTOR INTERTIA		g · ㎠	36	54	76	114
WEIGHTS		g	250	305	390	555
LENGTH(L)		mm	59,0	65,0	73,0	83,0
ALLOWABLE OVERHUNG LOAD (DISTANCE FROM END OF SHAFT)	3mm	N	22	22	22	22
	8mm		26	26	26	26
	13mm		33	33	33	33
	18mm		46	46	46	46
ALLOWABLE THRUST LOAD		N	Lower than MOTOR weight			
INSULATION RESISTANCE		Mohm	100min, (at 500VDC)			
DIELECTRIC STRENGTH		V/mm	500 (at 50Hz 1min,)			
TEMPERATURE CLASS		——	CLASS B (130℃)			
OPERATING TEMPERATURE		℃	0 to 55			
ALLOWABLE TEMPERATURE		℃	85Max			

2) Dimensions

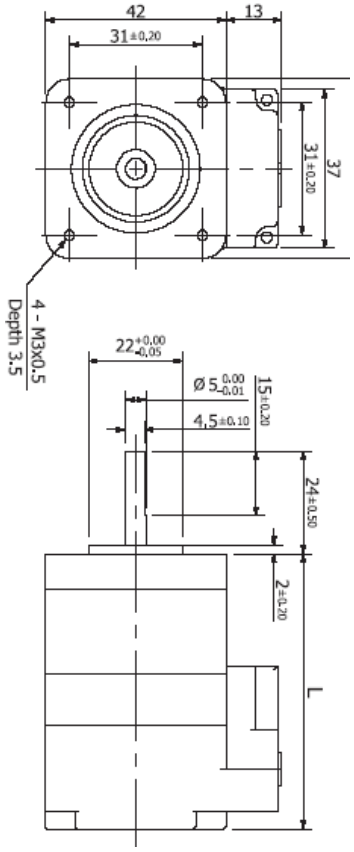

3.3 EzM-56 Series

1) Specifications

M O D E L		UNIT	EzM-56S-A EzM-56S-B EzM-56S-C	EzM-56M-A EzM-56M-B EzM-56M-C	EzM-56L-A EzM-56L-B EzM-56L-C	EzM-56XL-A EzM-56XL-B EzM-56XL-C
DRIVE METHOD		——	BI-POLAR	BI-POLAR	BI-POLAR	BI-POLAR
NUMBER OF PHASES		——	2	2	2	2
VOLTAGE		VDC	1,89	2,28	2,82	3,57
CURRENT per PHASE		A	3,0	3,0	3,0	3,0
RESISTANCE per PHASE		Ohm	0,63	0,76	0,94	1,19
INDUCTANCE per PHASE		mH	2,64	3,80	6,30	7,97
HOLDING TORQUE		mN · m	810	1320	2490	3540
ROTOR INTERTIA		g · ㎠	189	249	493	737
WEIGHTS		g	505	710	1185	1580
LENGTH(L)		mm	65,5	78,5	108,5	138,5
ALLOWABLE OVERHUNG LOAD (DISTANCE FROM END OF SHAFT)	3mm	N	52	52	52	52
	8mm		65	65	65	65
	13mm		85	85	85	85
	18mm		123	123	123	123
ALLOWABLE THRUST LOAD		N	Lower than MOTOR weight			
INSULATION RESISTANCE		Mohm	100min. (at 500VDC)			
DIELECTRIC STRENGTH		V/mm	500 (at 50Hz 1min.)			
TEMPERATURE CLASS		——	CLASS B (130℃)			
OPERATING TEMPERATURE		℃	0 to 55			
ALLOWABLE TEMPERATURE		℃	85Max			

2) Dimensions

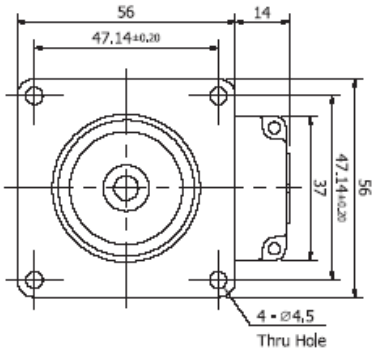

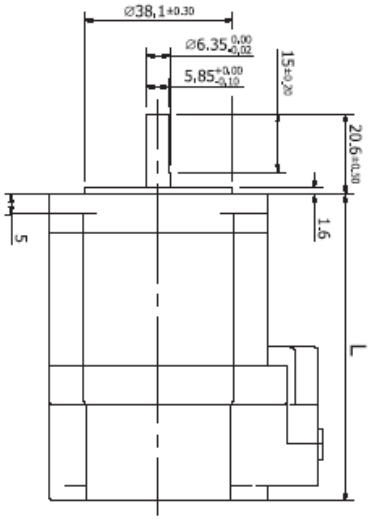

3.4 EzM-60 Series

1) Specifications

M O D E L		UNIT	EzM-60M-A EzM-60M-B EzM-60M-C	EzM-60L-A EzM-60L-B EzM-60L-C	EzM-60XL-A EzM-60XL-B EzM-60XL-C	EzM-60S-E	EzM-60M-E	EzM-60L-E
DRIVE METHOD		——	BI-POLAR	BI-POLAR	BI-POLAR	BI-POLAR	BI-POLAR	BI-POLAR
NUMBER OF PHASES		——	2	2	2	2	2	2
VOLTAGE		VDC	2,52	3,36	4,17	1,4	1,7	2,6
CURRENT per PHASE		A	2,8	2,8	2,8	4,0	4,0	4,0
RESISTANCE per PHASE		Ohm	0,9	1,2	1,5	0,35	0,43	0,65
INDUCTANCE per PHASE		mH	3.6	4.6	6.8	0.8	1.38	2.4
HOLDING TORQUE		mN · m	1650	2100	3100	880	1370	2700
ROTOR INTERTIA		g · ㎠	400	570	840	275	400	840
WEIGHTS		kg	0,83	1,26	1,46	0,63	0,81	1,38
LENGTH(L)		mm	80,5	91,5	112,5	58,3	67,3	99,3
ALLOWABLE OVERHUNG LOAD (DISTANCE FROM END OF SHAFT)	3mm	N	70	70	70	70	70	70
	8mm		87	87	87	87	87	87
	13mm		114	114	114	114	114	114
	18mm		165	165	165	165	165	165
ALLOWABLE THRUST LOAD		N	Lower than MOTOR weight					
INSULATION RESISTANCE		Mohm	100min. (at 500VDC)					
DIELECTRIC STRENGTH		V/mm	500 (at 50Hz 1min.)					
TEMPERATURE CLASS		——	CLASS B (130℃)					
OPERATING TEMPERATURE		℃	0 to 55					
ALLOWABLE TEMPERATURE		℃	85Max					

2) Dimensions

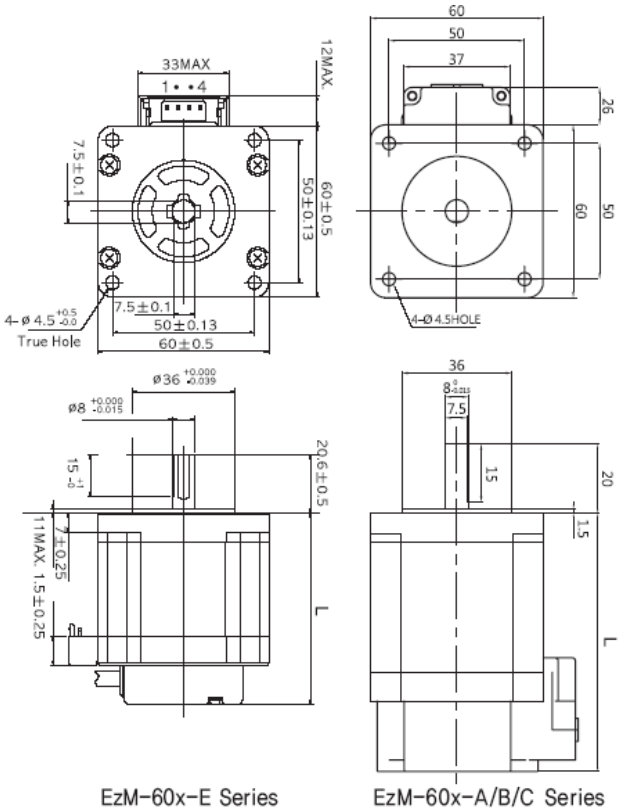

EzM-60x-E Series EzM-60x-A/B/C Series

3.5 EzM-86 Series

1) Specifications

M O D E L		UNIT	EzM-86M-A	EzM-86L-A	EzM-86XL-A
DRIVE METHOD		——	BI-POLAR	BI-POLAR	BI-POLAR
NUMBER OF PHASES		——	2	2	2
VOLTAGE		VDC	2.4	3.6	4.38
CURRENT per PHASE		A	6.0	6.0	6.0
RESISTANCE per PHASE		Ohm	0.4	0.6	0.73
INDUCTANCE per PHASE		mH	3.5	6.5	8.68
HOLDING TORQUE		mN · m	4500	8500	12000
ROTOR INTERTIA		g · ㎠	1400	2700	4000
WEIGHTS		kg	2.4	3.9	5.4
LENGTH(L)		mm	108	146	184
ALLOWABLE OVERHUNG LOAD (DISTANCE FROM END OF SHAFT)	3mm	N	270	270	270
	8mm		300	300	300
	13mm		350	350	350
	18mm		400	400	400
ALLOWABLE THRUST LOAD		N	Lower than MOTOR weight		
INSULATION RESISTANCE		Mohm	100min. (at 500VDC)		
DIELECTRIC STRENGTH		V/mm	500 (at 50Hz 1min.)		
TEMPERATURE CLASS		——	CLASS B (130℃)		
OPERATING TEMPERATURE		℃	0 to 55		
ALLOWABLE TEMPERATURE		℃	85Max		

2) Dimensions

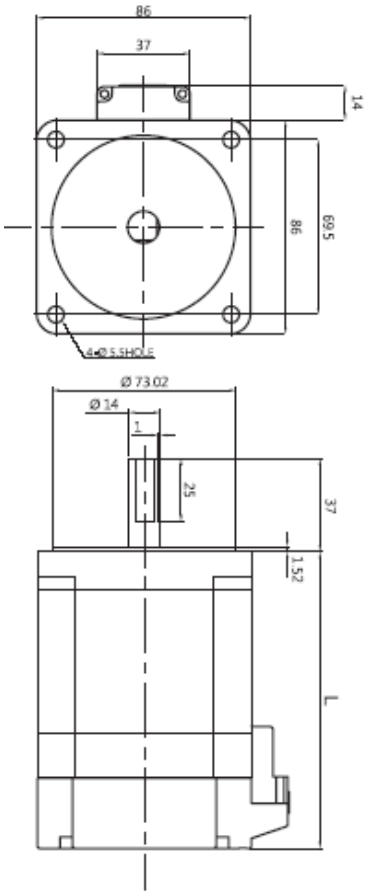

4. Characteristics of Motor Torque

※Measured Condition
Input Voltage = 24VDC
Motor Current = Regular Current
(Refer to Motor Specification)
Drive = Ezi-SERVO Plus-R

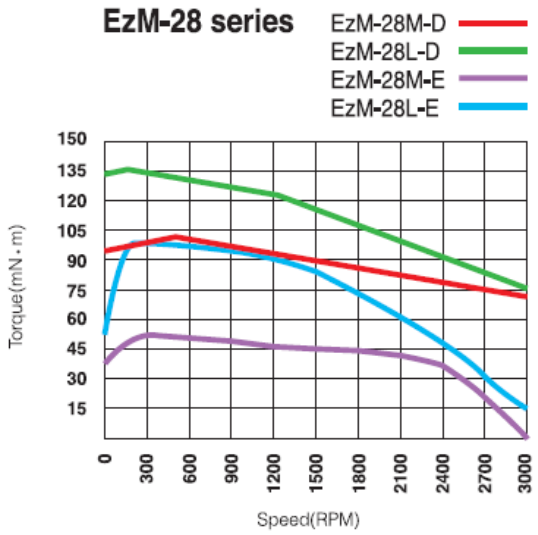

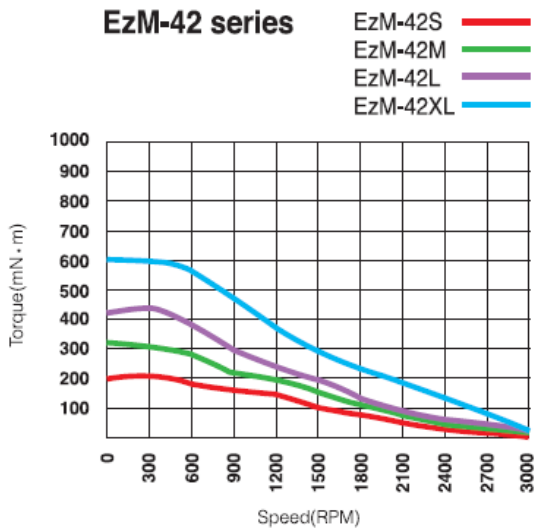

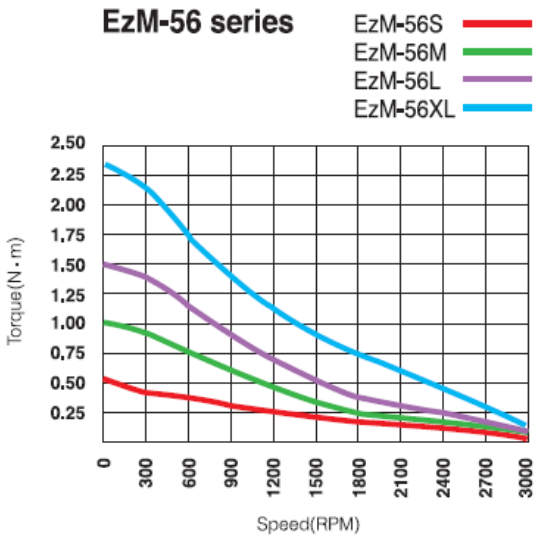

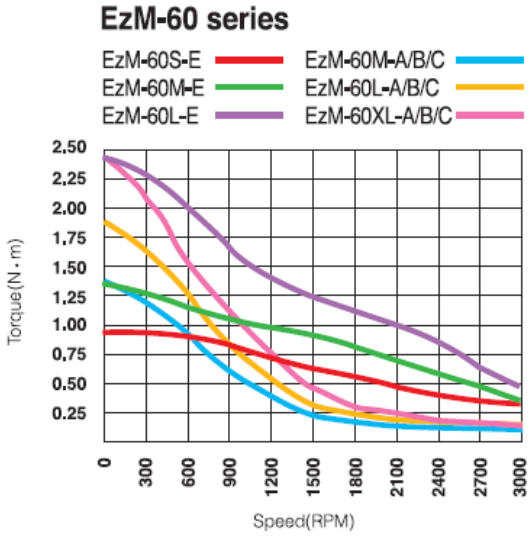

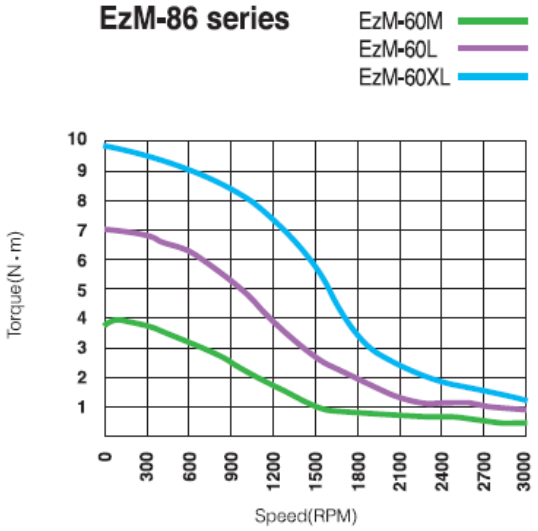

5. Configuration of the Controller

5.1 Combination of Motor and Drive

Ezi-SERVO-PR-42S-A-□

- **Closed Loop Stepping System Name**
- **Communication Type**
  - PR : RS-485
- **Motor Flange Size**
  - 28 : 28mm
  - 42 : 42mm
  - 56 : 56mm
  - 60 : 60mm
  - 86 : 86mm
- **Motor Length**
  - S : Short
  - M : Middle
  - L : Long
  - XL : Extra Long
- **Encoder Resolution**
  - A : 10,000/Rev.
  - B : 20,000/Rev.
  - C : 32,000/Rev.
  - D : 16,000/Rev.
  - E : 2,000/Rev.
- **User Code**

Unit Part Number	Motor Model Number	Drive Model Number
Ezi-SERVO-PR-28M-D *1	EzM-28M-D	EzS-NDR-28M-D
Ezi-SERVO-PR-28M-E	EzM-28M-E	EzS-NDR-28M-E
Ezi-SERVO-PR-28L-D *1	EzM-28L-D	EzS-NDR-28L-D
Ezi-SERVO-PR-28L-E	EzM-28L-E	EzS-NDR-28L-E
Ezi-SERVO-PR-42S-A	EzM-42S-A	EzS-NDR-42S-A
Ezi-SERVO-PR-42S-B	EzM-42S-B	EzS-NDR-42S-B
Ezi-SERVO-PR-42S-C	EzM-42S-C	EzS-NDR-42S-C
Ezi-SERVO-PR-42M-A	EzM-42M-A	EzS-NDR-42M-A
Ezi-SERVO-PR-42M-B	EzM-42M-B	EzS-NDR-42M-B
Ezi-SERVO-PR-42M-C	EzM-42M-C	EzS-NDR-42M-C
Ezi-SERVO-PR-42L-A	EzM-42L-A	EzS-NDR-42L-A
Ezi-SERVO-PR-42L-B	EzM-42L-B	EzS-NDR-42L-B
Ezi-SERVO-PR-42L-C	EzM-42L-C	EzS-NDR-42L-C
Ezi-SERVO-PR-42XL-A *2	EzM-42XL-A	EzS-NDR-42XL-A
Ezi-SERVO-PR-42XL-B *2	EzM-42XL-B	EzS-NDR-42XL-B
Ezi-SERVO-PR-42XL-C *2	EzM-42XL-C	EzS-NDR-42XL-C
Ezi-SERVO-PR-56S-A	EzM-56S-A	EzS-NDR-56S-A
Ezi-SERVO-PR-56S-B	EzM-56S-B	EzS-NDR-56S-B
Ezi-SERVO-PR-56S-C	EzM-56S-C	EzS-NDR-56S-C
Ezi-SERVO-PR-56M-A	EzM-56M-A	EzS-NDR-56M-A
Ezi-SERVO-PR-56M-B	EzM-56M-B	EzS-NDR-56M-B
Ezi-SERVO-PR-56M-C	EzM-56M-C	EzS-NDR-56M-C
Ezi-SERVO-PR-56L-A	EzM-56L-A	EzS-NDR-56L-A
Ezi-SERVO-PR-56L-B	EzM-56L-B	EzS-NDR-56L-B
Ezi-SERVO-PR-56L-C	EzM-56L-C	EzS-NDR-56L-C
Ezi-SERVO-PR-56XL-A	EzM-56XL-A	EzS-NDR-56XL-A
Ezi-SERVO-PR-56XL-B	EzM-56XL-B	EzS-NDR-56XL-B
Ezi-SERVO-PR-56XL-C	EzM-56XL-C	EzS-NDR-56XL-C
Ezi-SERVO-PR-60S-E	EzM-60S-E	EzS-NDR-60S-E
Ezi-SERVO-PR-60M-A *2	EzM-60M-A	EzS-NDR-60M-A
Ezi-SERVO-PR-60M-B *2	EzM-60M-B	EzS-NDR-60M-B
Ezi-SERVO-PR-60M-C *2	EzM-60M-C	EzS-NDR-60M-C
Ezi-SERVO-PR-60M-E	EzM-60M-E	EzS-NDR-60M-E
Ezi-SERVO-PR-60L-A *2	EzM-60L-A	EzS-NDR-60L-A
Ezi-SERVO-PR-60L-B *2	EzM-60L-B	EzS-NDR-60L-B
Ezi-SERVO-PR-60L-C *2	EzM-60L-C	EzS-NDR-60L-C
Ezi-SERVO-PR-60L-E	EzM-60L-E	EzS-NDR-60L-E
Ezi-SERVO-PR-60XL-A *2	EzM-60XL-A	EzS-NDR-60XL-A
Ezi-SERVO-PR-60XL-B *2	EzM-60XL-B	EzS-NDR-60XL-B
Ezi-SERVO-PR-60XL-C *2	EzM-60XL-C	EzS-NDR-60XL-C
Ezi-SERVO-PR-86M-A	EzM-86M-A	EzS-NDR-86M-A
Ezi-SERVO-PR-86L-A	EzM-86L-A	EzS-NDR-86L-A
Ezi-SERVO-PR-86XL-A	EzM-86XL-A	EzS-NDR-86XL-A

5.2 Controller Configurtion

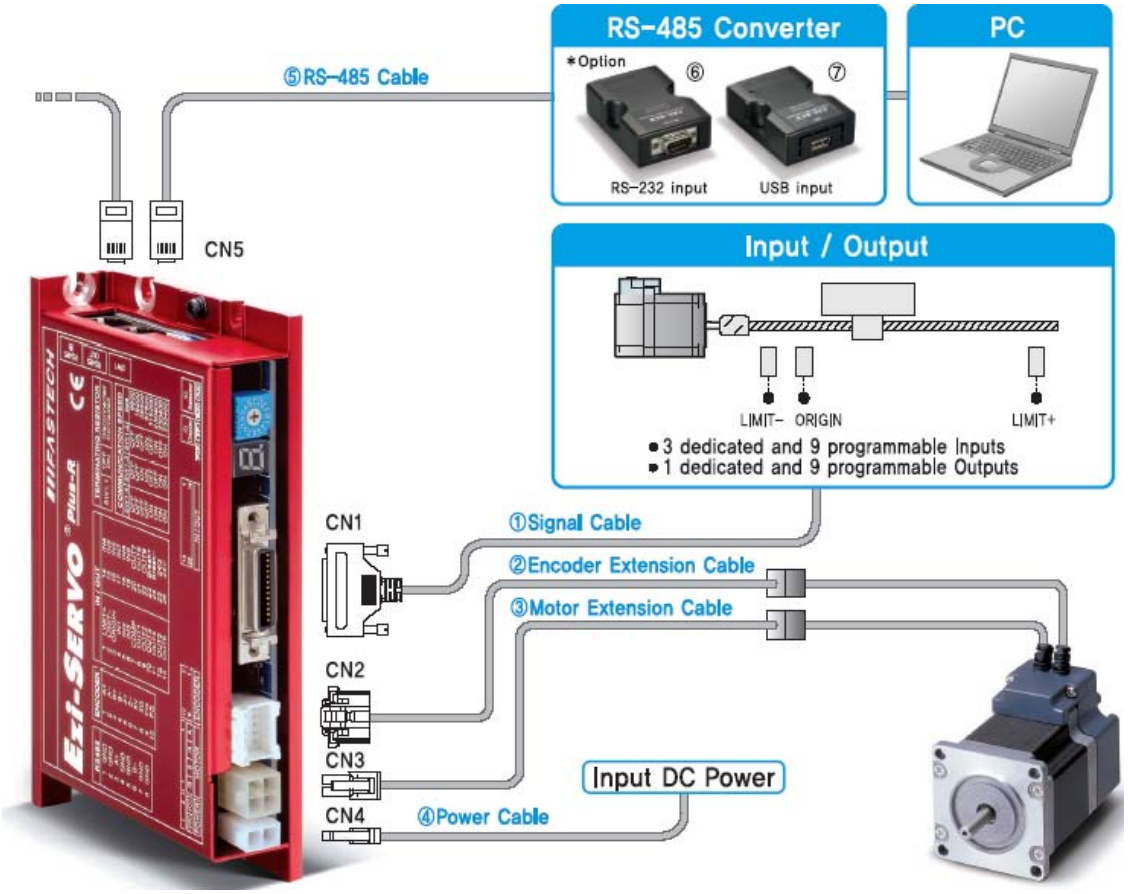

◆ 86mm motor drive only(EzS-NDR-86 Series)

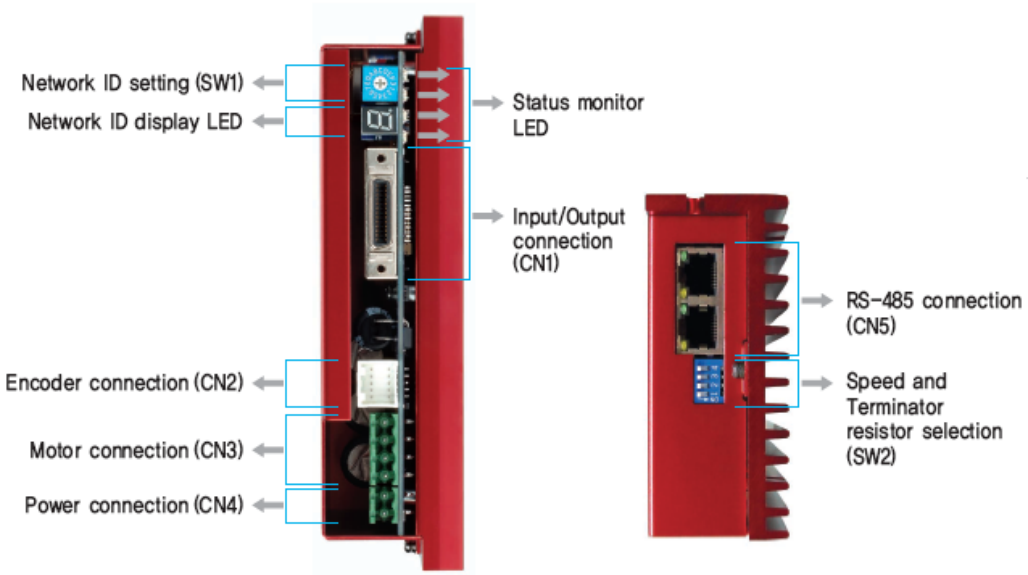

5.3 External Wiring Diagram

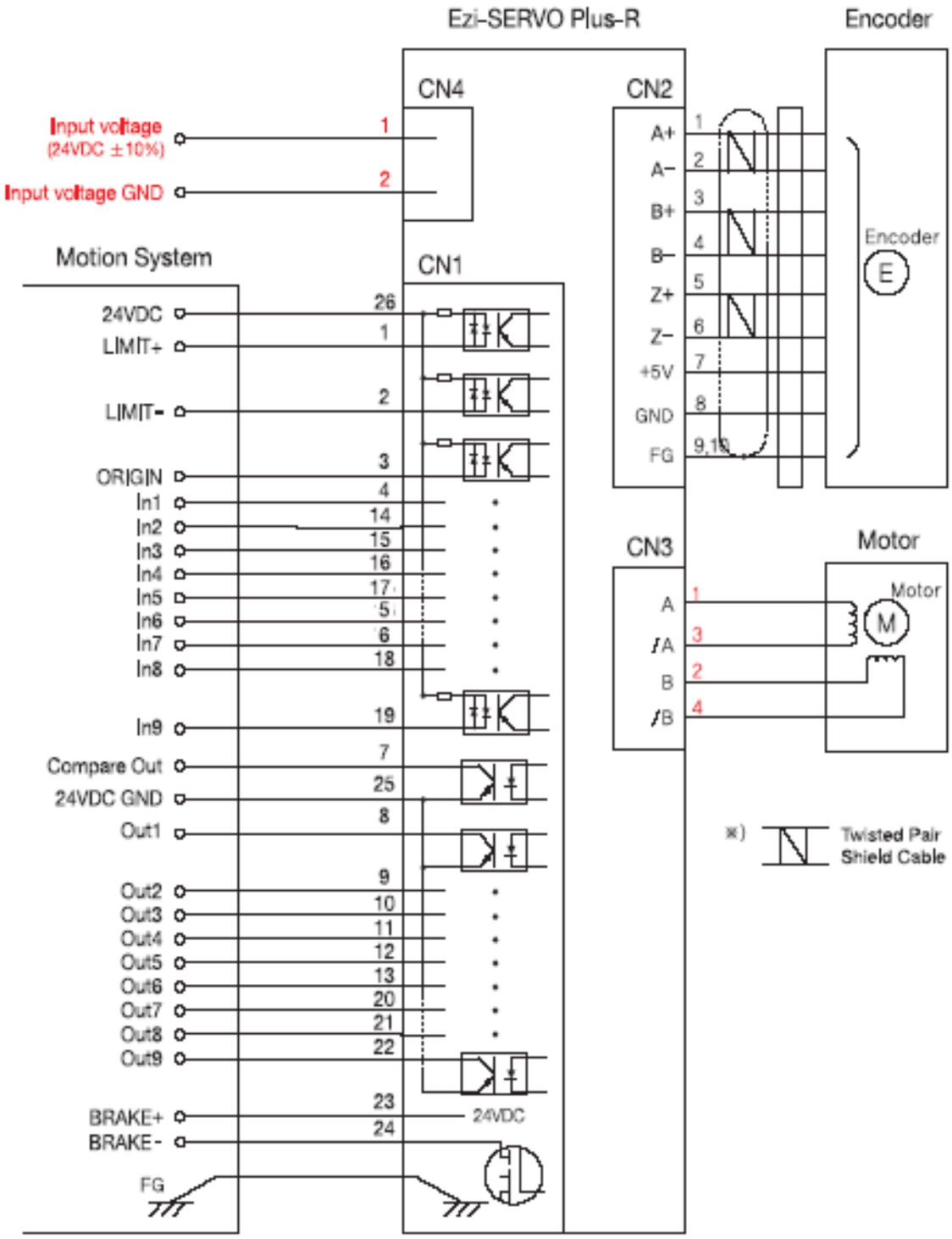

◆ 86mm motor drive only(EzS-NDR-86 Series)

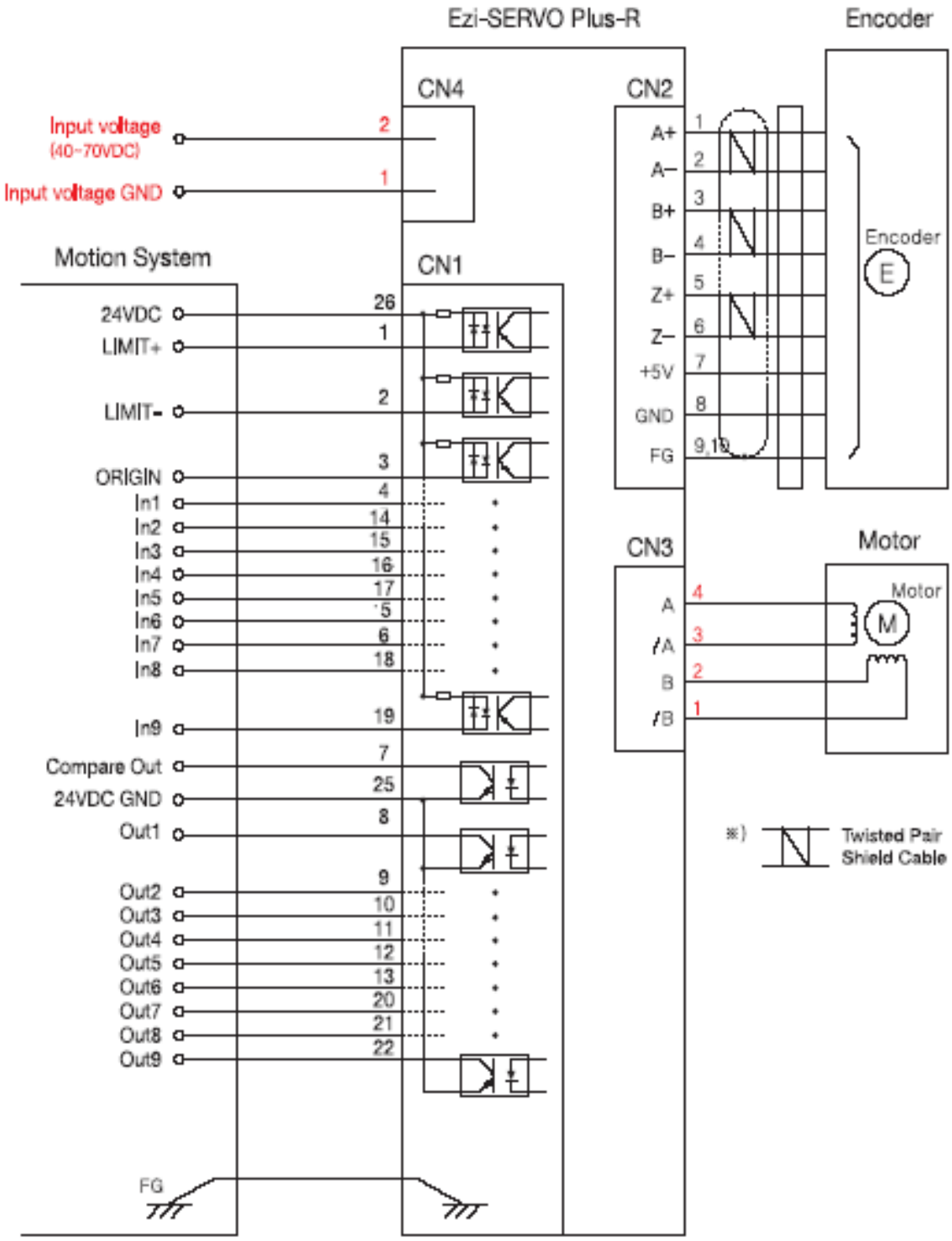

6. External Name and Function Setting

6.1 Appearance and Part Name

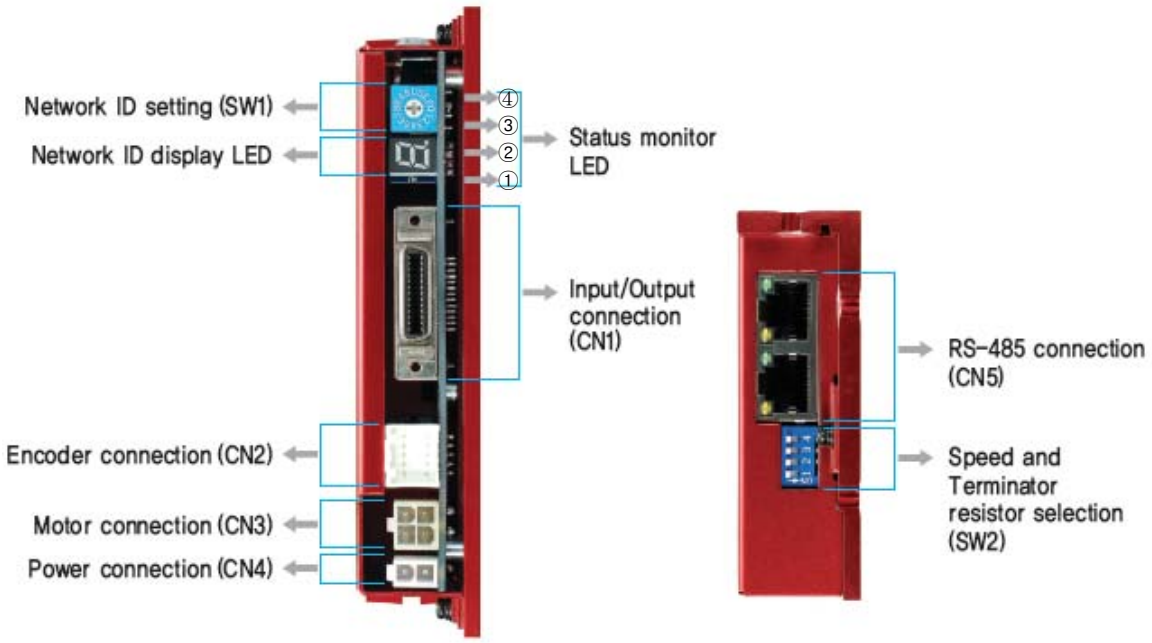

6.2 Status Display LED

Display	Color	Function	On/Off Condition
① POW	Green	Power input indication	Lights On when power is applied.
② INP	Yellow	Complete Positioning motion	When position command pulse is input and then the position deviation is within the value set by the parameter, this lights On.
③ SON	Orange	Servo On/Off indication	Servo On : light On Servo Off : light Off
④ ALM	Red	Alarm indication	Flash when protective function is run. (If you count LED flash time, you can check what protective function is run.)

6.3 Drive ID Select Switch(SW1)

1) When several modules are connected to one daisy chain network, this switch is to set intrinsic ID to each module.
2) The switch can set intrinsic ID to each module up to 16 numbers from 0 to F(15).

Position	ID No.	Position	ID No.
0	0	8	8
1	1	9	9
2	2	A	10
3	3	B	11
4	4	C	12
5	5	D	13
6	6	E	14
7	7	F	15

6.4 Communication Speed and Terminal Resistance Select Switch(SW2)

SW2 is to set the communication speed between central controller(PC) and Drive. If corresponding drive module is connected to the end of one network segment, SW2 sets whether terminal resistance is used. SW2.1 is to set the use of terminal resistance, and SW2.2~SW2.4 is to set the communication speed as follows.

SW2.1	SW2.2	SW2.3	SW2.4	Baud rate [bps]
X	OFF	OFF	OFF	9600
X	ON	OFF	OFF	19200
X	OFF	ON	OFF	38400
X	ON	ON	OFF	57600
X	OFF	OFF	ON	115200 *1
X	ON	OFF	ON	230400
X	OFF	ON	ON	460800
X	ON	ON	ON	921600

*1 : default setting value.

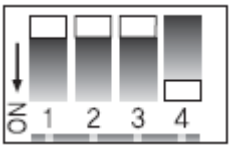

SW2.1 is OFF.: Terminal resistance is Off.

SW2.1 is ON. : Terminal resistance is On.

Caution	The communication speed of drive modules connected to one segment must be set to the same value.

Caution	Support max. 115200[bps] when using RS-232 to RS-485 conveter

6.5 Motor Connector(CN3)

Motor connector

(Connector Type : Molex 5569-04A2)

No.	Function
1	A Phase
2	B Phase
3	/A Phase
4	/B Phase

(86mm)

No.	Function
1	/B Phase
2	B Phase
3	/A Phase
4	A Phase

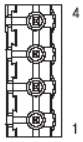

6.6 Encoder Connector(CN2)

Encoder connector (Connector Type : Molex 55959-1030)

No.	Function
1	A+
2	A-
3	B+
4	B-
5	Z+
6	Z-
7	5VDC
8	5VDC GND
9	Frame GND
10	Frame GND

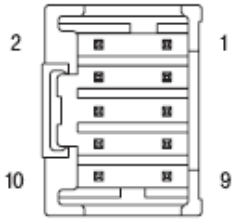

For setup of connected encoder resolution, refer to 「12 Parameter」.

6.7 Power Connector(CN4)

Power supply connector (Connector Type : Molex 5569-02A2)

No.	Function
1	Power input : 24VDC ± 10%
2	Power input : GND

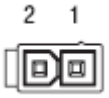

(86mm)

No.	Function
1	Power input : GND
2	Power input : 24VDC ± 10%

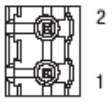

6.8 I/O Signal Connector(CN1)

Input/output signal connector (Connector Type : 3M 10226-5A2JL)

Function	No	No	Function
LIMIT+ (Dedicated Input)	1	14	Digital In2 (Programmable Input)
LIMIT- (Dedicated Input)	2	15	Digital In3 (Programmable Input)
ORIGIN (Dedicated Input)	3	16	Digital In4 (Programmable Input)
Digital In1 (Programmable Input)	4	17	Digital In5 (Programmable Input)
Digital In6 (Programmable Input)	5	18	Digital In8 (Programmable Input)
Digital In7 (Programmable Input)	6	19	Digital In9 (Programmable Input)
Compare Out (Dedicated Output)	7	20	Digital Out7 (Programmable Output)
Digital Out1 (Programmable Output)	8	21	Digital Out8 (Programmable Output)
Digital Out2 (Programmable Output)	9	22	Digital Out9 (Programmable Output)
Digital Out3 (Programmable Output)	10	23	+24V for brake system(Output)
Digital Out4 (Programmable Output)	11	24	Control signal of brake system(Output)
Digital Out5 (Programmable Output)	12	25	GND external(Input)
Digital Out6 (Programmable Output)	13	26	+24V external(Input)

* BRAKE function is option.
* This connector fixed pin is connected to frame GND through a mount hall.

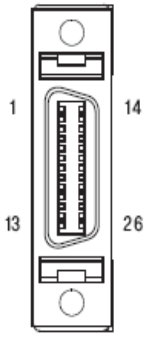

The programmable input/output pin is set by using user program(GUI) or DLL library.

6.9 Communication Connector(CN5)

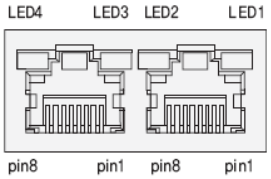

Connector Type : RJ45

Cable Type : UTP/STP CAT5E

Pin No.	Function
1,2,4,5,7,8	GND
3	Data+
6	Data-
case	Frame GND

LED No.	Display	Color	Lighting Condition
1,3	RUN	Green	Flash when CPU in the drive operates
2,4	COMM	Yellow	Flash when this communicates with the upper controller

7. Control I/O Signal

7.1 Signal Cabling

All control I/O signals use connector CN1 as specified below.

1) Input : 「Limit+」, 「Limit-」, 「Origin」 signals are fixed to CN1 No. 1,2,3 respectively. Other signals like Reset are assigned to IN1~IN9 terminal blocks. (3 dedicated input + 9 programmable input = total 12 input pins.)

CN1 No.	Signal Name	Function
1	Limit+	Positive limit sensor signal
2	Limit-	Negative limit sensor signal
3	Origin	Origin sensor signal
4	IN1	Clear Pos Position table A0 ~ Position table A7 (PT A0~PT A7) Position table start execution (PT Start) Soft Stop(Stop) Jog+ Jog- AlarmReset ServoON Pause Origin Search Teaching Emergency Stop(E-Stop) Jump Position Table input 0 ~ Jump Position Table input 2 (JPT IN 0~ JPT IN 2) Jump Position Table start (JPT Start) User input 0 ~ User input 5 (User IN 0 ~ User IN 5)
14	IN2	
15	IN3	
16	IN4	
17	IN5	
5	IN6	
6	IN7	
18	IN8	
19	IN9	

2) Output : 「COMP」 signal is dedicated to CN1 No.7. Other signals like Inposition are assigned to OUT1~OUT9 terminal blocks. (1 dedicated input + 9 programmable input = total 10 input pins.)

CN1 No.	Signal Name	Function
7	COMP	Specific output signal
8	OUT1	InPosition Alarm Moving Acc/Dec ACK END AlarmBlnk OriginSearchOK ServoReady Position Table output 0 ~ Position Table output 2 (PT OUT 0 ~ PT OUT 2) User Output 0 ~ User Output 8
9	OUT2	
10	OUT3	
11	OUT4	
12	OUT5	
13	OUT6	
20	OUT7	
21	OUT8	
22	OUT9	

7.2 Connection Circuit

All drive I/O signals are insulated by a photocoupler. The signals display the internal photocoupler status - [ON: Conduction] and [OFF: Non- Conduction], not the signal voltage level.

1) Input Circuit

Input circuit power of DC24V±10% (consumed current : about 5mA/circuit) should be separately prepared.

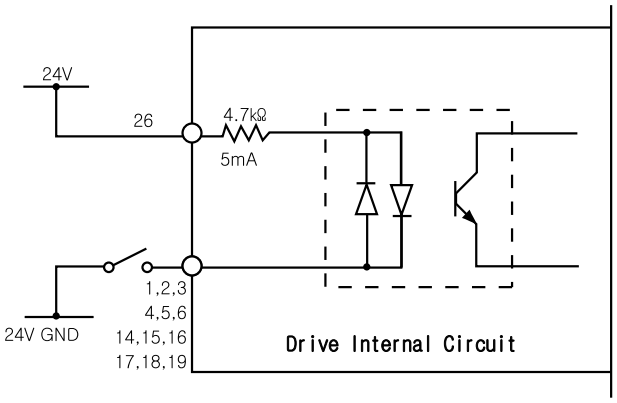

2) Output Circuit

Output circuit power should be separately prepared. This may share input circuit power. In this case, working power capacity should add output power capacity to input power capacity.

Applied voltage and power capacity in the control output port are as follows.

· Applied voltage ≤ 30V

· Electrified current ≤ 15mA

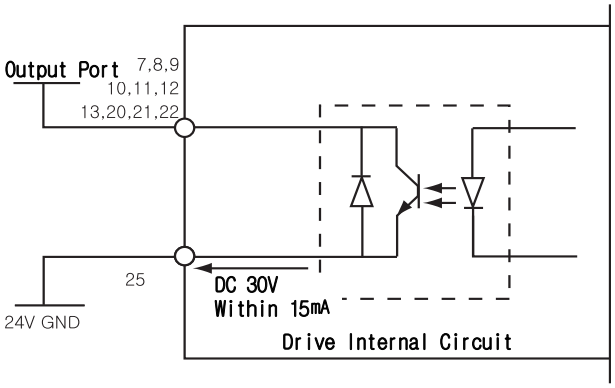

7.3 Input Signal

1) Limit Sensor and Origin Sensor

Limit sensors and origin sensor are assigned to LIMIT+, LIMIT- , and ORIGIN pin in the CN1 connector respectively. LIMIT+ and LIMIT- sensors are used to limit the motion of each axis clockwise and counterclockwise to prevent mechanical collision. Origin sensor is to set the origin of equipment.

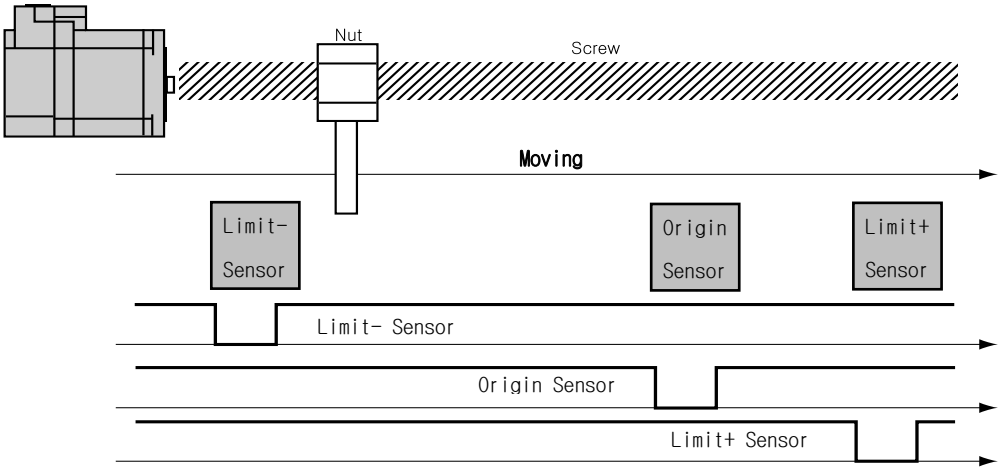

2) Clear Pos

This input signal sets the command position and the actual position to 0 in relation to motion position control. The reset signal pulse scale is 10ms or more.

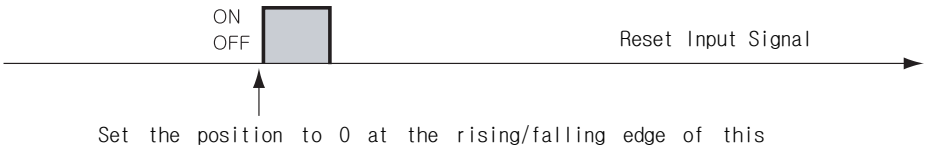

3) Position Table A0 - A7 (PT A0~A7) Input

The position table supports the machine so that its motion can be controlled by I/O signals of central controller. It can directly transmit commands such as position table number, start/stop and origin return to the machine through the PLC. Also, the user can check output signals such as in-position, completion of origin return and Servo ready through the PLC.

「Position Table A0~A7」 inputs are total 8 bits of input signal. It is used to set 256 position table numbers. There are two application methods as follows.

1) To set position table number(0~255) to be run by 'PT start' input signal.
2) To set position table number(0~255) to save current position values by 'Teaching' input signal.

By using PT A0~A7 signals, the position table address can be set from 0 to 255 with a binary number. A0 is least significant bit and A7 is most significant bit. The following table shows how to assign position table number.

*1. Save signal cabling : If 'PT A0~A7' signal is not connected when motioning by 'PT Start' signal, the position table number will be '0'

A7	A6	A5 ~ A3	A2	A1	A0	PT No.
0	0	0	0	0	0	0
0	0	0	0	0	1	1
0	0	0	0	1	0	2
0	0	0	0	1	1	3
… … … … … … … … … … … … … … … … … …						
1	1	1	1	1	0	254
1	1	1	1	1	1	255

4) Position Table Start (PT Start) Input

By using PT A0~A7 signals, set and input the running PT start number. Then the motion pattern corresponding to the PT No. will be executed.

Following example shows that total 6 motion patterns are in order executed from No.0 to No.32 and then stopped.

1) All of PT A0~A7 is set to '0' and PT number is set to '0'.
2) Set PT Start signal to [ON], and PT No.0 motion pattern will be executed.
3) When the motion pattern is started by PT, ACK signal and END signal are displayed to [ON] at CN1 output port as illustrated below. The signal is kept until one motion pattern loop is stopped. After all motions are stopped, the output signal level is set to [OFF].
4) PT Start signal pulse scale is 10ms or more.

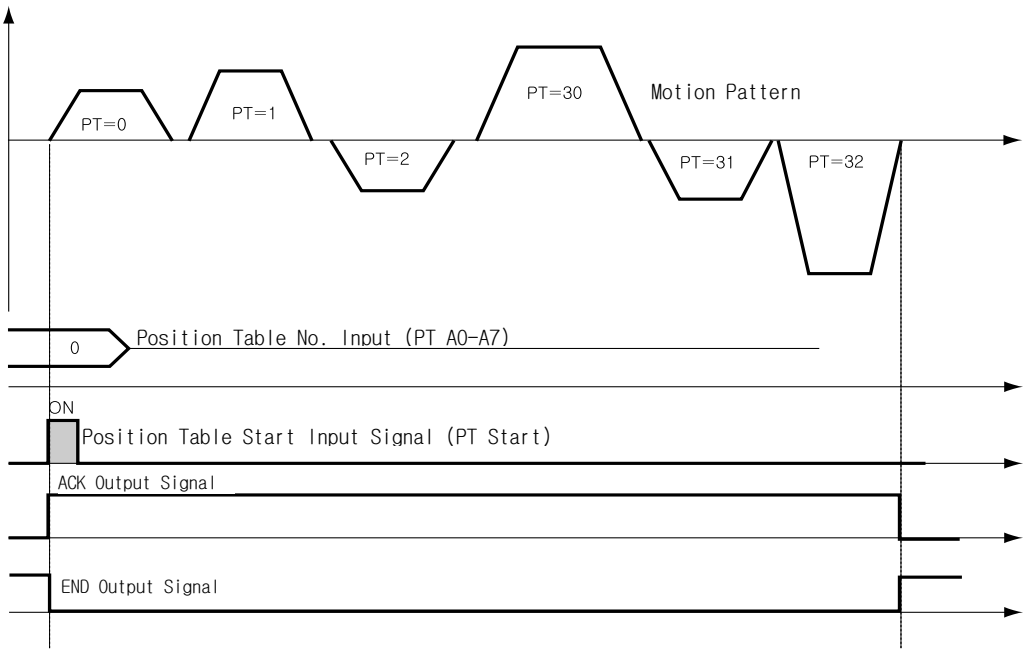

5) Soft Stop Input

Soft stop input signal is to stop motion patterns under operation. The deceleration condition until they stop complies with the deceleration time value and the start speed value set previously. The soft stop signal pulse scale is 10ms or more.

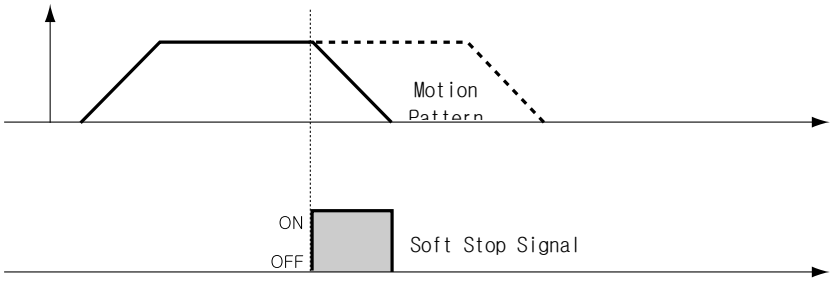

6) Jog+ and Jog- Input

When Jog+ or Jog- signal is ON, the motor rotates clockwise or counterclockwise until it reaches the hardware limit or the software limit. Jog motion pattern is subject to jog related parameters (No.7: start speed, No.6: speed, No.8: Acc Dec time).

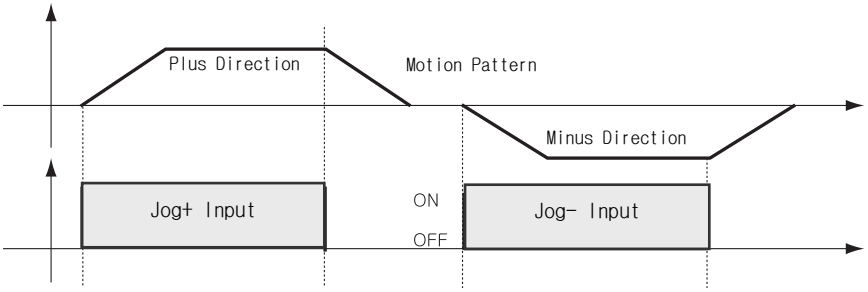

7) Servo ON and AlarmReset Input

When the protective function of drive executes, alarm output is released. When AlarmReset input is set to ON, alarm output and alarm blink output are released. Before releasing alarm output, the user must remove any cause of alarm working.

When Servo ON/OFF signal is set to OFF, the drive stops supplying the current to the motor and so the user can directly adjust the output position. When Servo ON/OFF signal is set to ON, the drive restarts to supply the current to the motor and its torque is recovered. Before operating the motor, the user must set it to ON.

When the drive is set to Servo ON, CN1 connector's ServoReady output signal is set to ON.

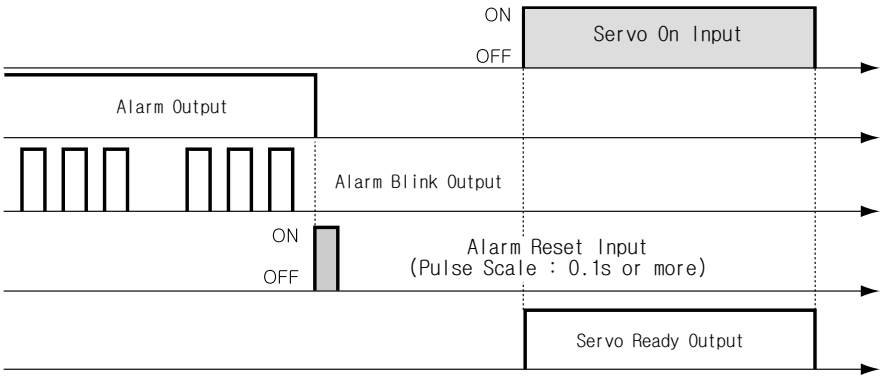

*1. If 'No.0: Pulse per Revolution' in the parameter list is changed, the motor is set to Servo OFF.

*2. After 'ServoON' signal is assigned to input pin, it is impossible to use

'SERVO ON' button in UserProgram(GUI).

8) Pause Input

When Pause signal is set to ON, the motion in service is stopped. There are two pause signal operation modes as follows.

① Case A : When Pause signal is set to ON, the motor starts to decelerate. Pause signal becomes OFF before the motor is completely stopped. To start motion, Pause signal should be set to ON.

② Case B : When Pause signal is set to ON, the motor starts to decelerate. The signal is continuously maintained since the motor is completely stopped. To start motion, Pause signal should be set to OFF.

Pause signal pulse scale is 10ms or more.

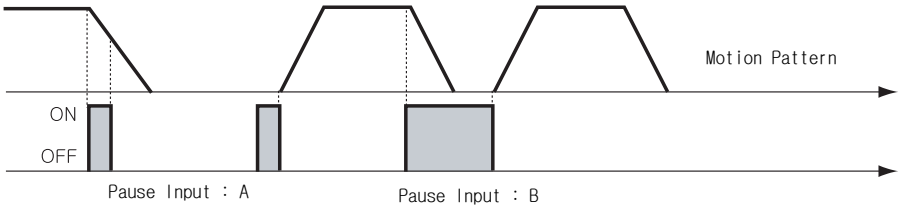

*1. This function is not applied while 'Repeat Test' of the User Program(GUI) is executing.

9) Origin Search Input

When 'Origin Search' signal is set to ON (10ms or more), it starts to search the origin position according to selected conditions. The conditions are subject to parameters such as No.20:Org Method, No.17:Org Speed, No.18:Org Search Speed, No.19:Org AccDec Time, No.21:Org Dir. (For more information, refer to '12.Parameter'.) When the origin search command is ended, 'Origin Search OK' signal is set to ON to CN1 connector's output port.

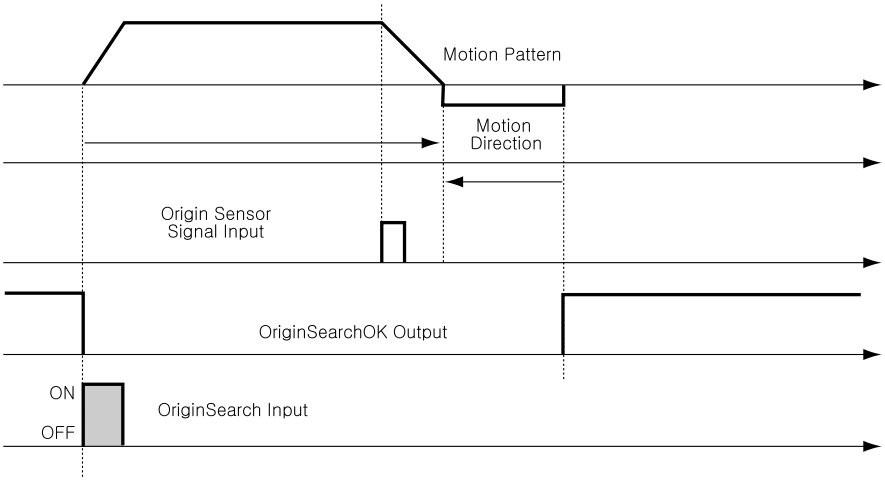

10) Teaching Input

Teaching signal functions that the position value[pulse] being working can be automatically inputted into a 'position' value of a specific position table. If

it is hard to calculate the exact moving distance(position value) of specific motion mechanically, the user can measure the distance(position value) easily by using this signal.

1) By using User Program(GUI), set a command type of corresponding PT number among 4 kinds of absolute moving commands(Absolute Move).
2) By using input signal(PT A0~A7), select corresponding PT number.
3) When Teaching signal is set to ON, the position value[pulse] is save to the position value of corresponding PT. At this time, it becomes the absolute position value.
4) Teaching signal pulse scale is 10ms or more.

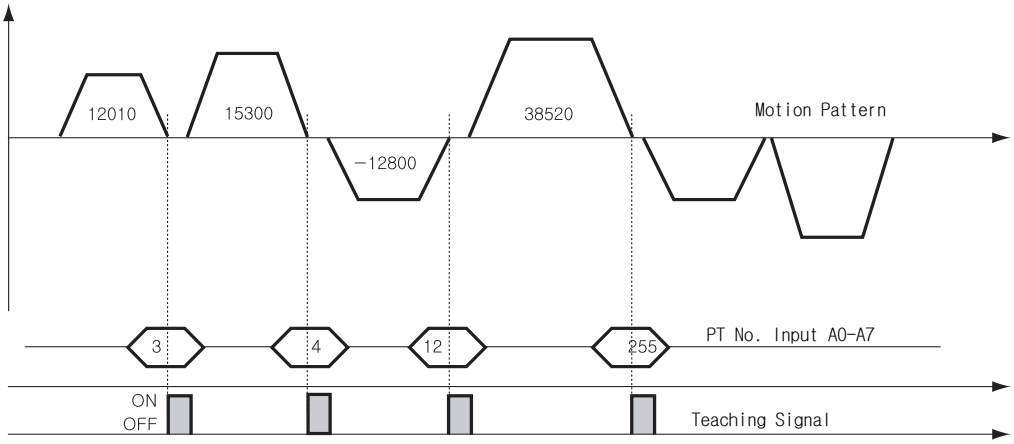

PT No.	Position Value [pulse] of Corresponding PT
3	12010
4	15300
12	-12800
255	38520

* After executing Teaching, click 'Refresh' icon, and the position value will be displayed to the position table.
* Click 'Save to ROM' icon, and the position value will be saved to the ROM area.
* Teaching signal can be used by two methods; the user assigns actual signal to the motor, or he clicks 'Teaching' icon at the 'I/O Monitoring' window of User Program(GUI).

11) E-Stop Input

When 'Emergency stop' signal is set to ON, the current motion is stopped immediately without deceleration. E-Stop signal pulse scale is 0.1s or more.

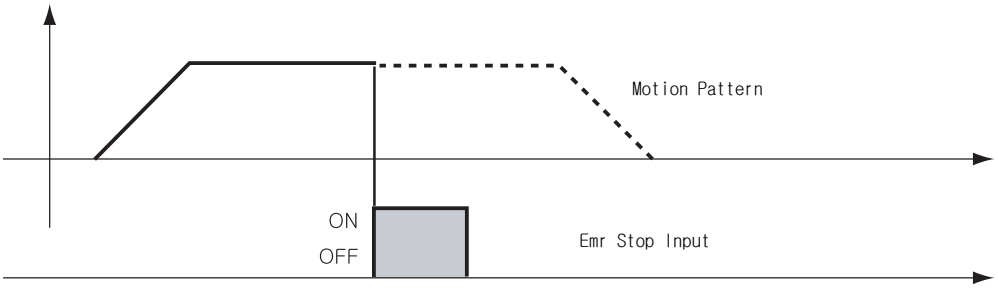

12) JPT Input0~Input2 (Jump Position Table Input) Input

To select motion pattern(position table number) to be subsequently executed according to input signal conditions.

【Example】 If PT 14 motion is operating, when there is no other input signal, next motion becomes PT 15 as shown in Figure 1). However, if 'JPT Input0~Input2' input signal is set to ON while PT 14 is executing, each corresponding position number is executed as shown in Figure 2)~4).

PT 14 Data

PT No.	…	JP Table No.	JPT 0	JPT 1	JPT 2
14	…	15	115	116	225

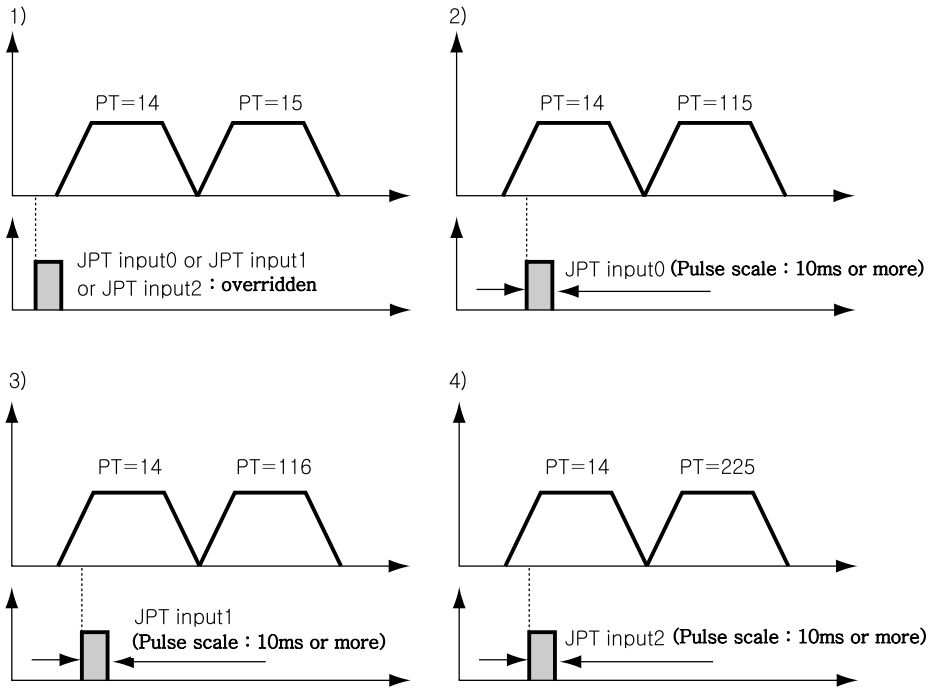

13) JPT(Jump Position Table) Start Input

To select motion pattern(position table number) to be subsequently executed according to input signal conditions. The difference from Paragraph 「13) 'JPT Input0~Input2 Input」 is:

1) PT number to be jumped must be composed to 10XXX;
2) Next motion is not executed until 'JPT Start' is set to ON. If 'Wait Time' value of PT data is more than '0', the time lapses additionally and then next motion is executed.

【Example】

PT 14 Data

PT No.	…	Wait Time	JP Table No	JPT 0	JPT 1	JPT 2
14	…	500	10015	10115	10116	10255

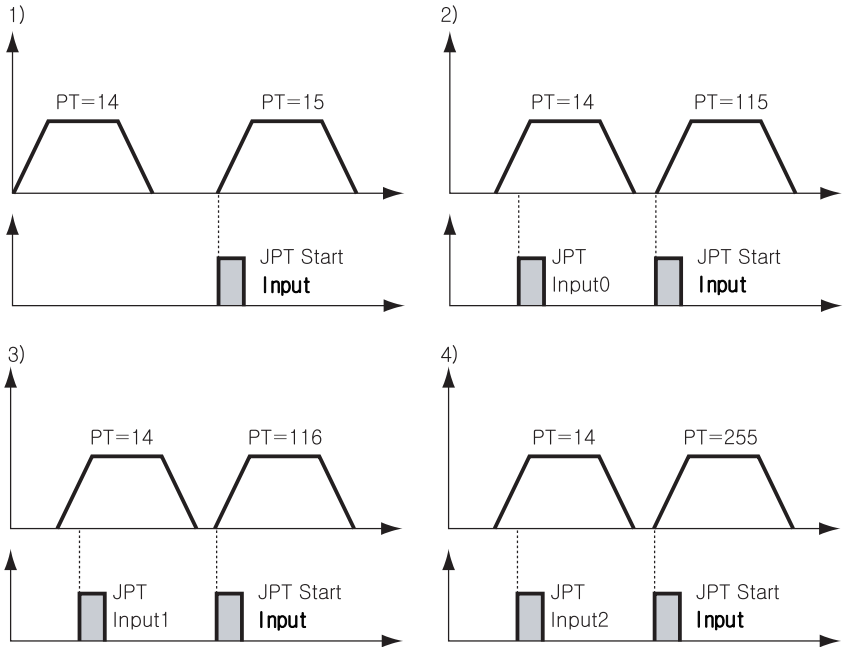

7.4 Output Signal

1) Compare Out Output

'Compare out' signal is displayed when specific conditions are performed. It is fixed to CN1 connector's COMP pin. And it is available when the motor needs to be synchronously controlled by an external controller.

2) Inposition Output

After the motor stop in target position exactly on Servo ON status, the signal becomes [ON]. The condition of this signal depends on parameter 'Position Loop Gain' and 'Inpos Value'.

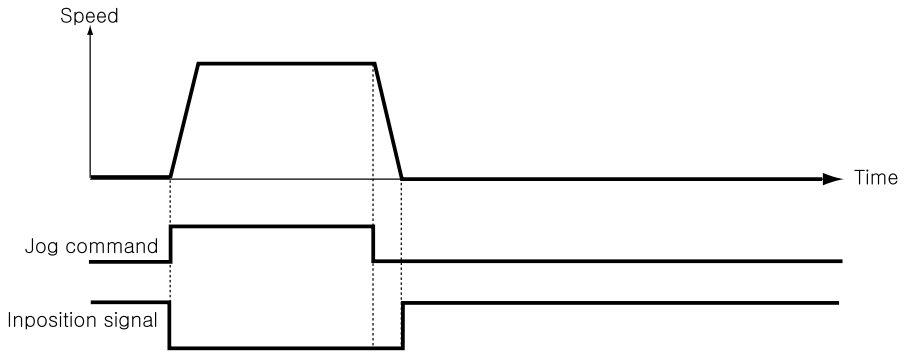

3) Alarm & AlarmBlink Output

When the motor operates normally, alarm output becomes OFF. When the protective function operates, alarm output becomes ON. The upper controller being used by the user detects this alarm and then stops motor operation command. If overload or overcurrent occurs while the motor is operating, the drive detects it and cuts off the motor's current. And alarm output is set to ON and also 'AlarmBlink' flash so that the user can check abnormality type. The following table shows alarm type according to flash count.

Flash Count	Alarm Name	Description
1	Overcurrent	The current through power devices in inverter exceeds the limit value
2	Overspeed	Command speed for motor exceeds 3000[rpm].
3	Step out	Position error value is higher than specified value in motor stop status.
4	Overload	The motor is continuously operated more than 5 second under a load exceeding the max. torque.
5	Overheat	The internal temperature of the drive exceeds 55℃.
6	Over regeneratived voltage	Back-EMF more than 70V.
7	Motor connection	The connection of drive and motor is defective.
8	Encoder connection	The connection of drive and encoder is defective.
9	Motor voltage error	The power supplied to the motor is less than low limit value.
10	Inposition error	After operation is finished, a position error occurs.

4) ACK and END Output

'ACK' and 'END' signals are available only when the motion is executed by position table. When ACK signal is set to ON and END signal is set to OFF, all motion loops are finished. Then ACK signal becomes OFF and END signal becomes ON. Refer to 「Ezi-SERVO Plus-R User Manual - 'Position Table Function'」.

5) Moving and Acc/Dec Output

As shown below, the position starts to move by motion command, and Moving signal becomes ON and Acc/Dec signal becomes ON in the acceleration and deceleration section only.

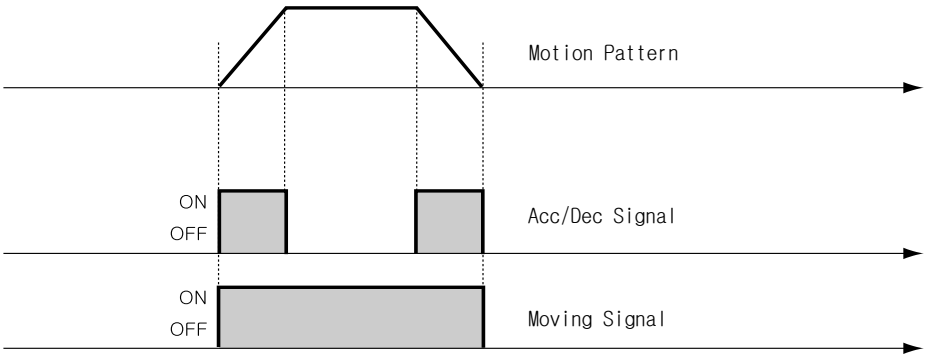

6) Org Search OK Output

When the origin return motion is executed by origin search command, 'Origin Search OK' signal is set to OFF. When the origin return motion is normally finished by the origin sensor, 'Origin Search OK' is set to ON. Refer to 「7.3 Input Signal - 9) Origin Search Input」.

7) Servo Ready Output

When the drive supplies power to the motor by Servo ON signal or command and is ready to perform motion command, 'ServoReady' signal displays ON signal. Refer to 「7.3 Input Signal - 7) Servo On and AlarmReset Input」.

8) PT(Position Table) Output 0~2

Control output used for 'Start/Stop Message Function'. When these items are set, this signal enables the user to check if corresponding PT motion starts or stops through control output signal. If 'Start/Stop Message Function' is not used, this signal should be set to 0 or 8. At the position set with other values, the motion operates as follows.

- If PT set items are set to '1~7', when the position starts to move, PT Output HEX value is displayed to 'PT Output 0 ~ PT Output 2'.
- If PT set items are set to '9~15', the position motion is finished and then PT Output HEX value is displayed to 'PT Output 0 ~ PT Output 2'.

For more information, refer to 「Ezi-SERVO Plus-R User Manual - Position Table Function」.

9) BRAKE+ and BRAKE-

This function is used for protect motor rotation in Servo ON status.
DC +24V is connect to 'BRAKE+' for brake logic and brake control signal is connect to 'BRAKE- '.

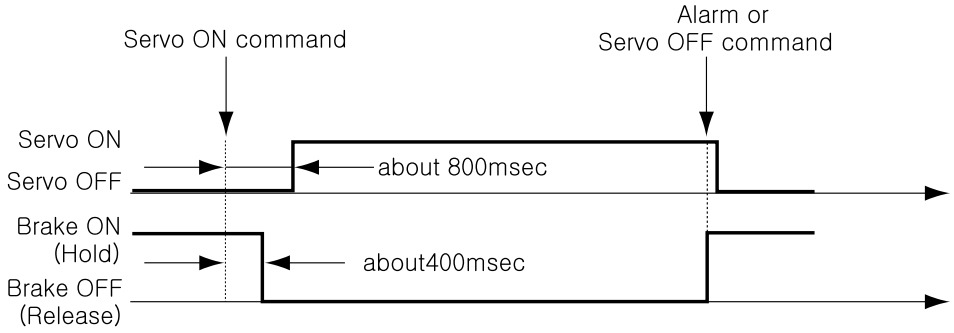

8. Operation

8.1 Power Supply Timing

Ezi-SERVO Plus-R is supplied power through drive module to motor. Therefore, connect the drive and the motor with a cable and then supply power to the drive module. After power is supplied, the motor is basically set to Servo OFF.

8.2 Servo ON Operation

After power is supplied, set the drive module to Servo ON as follows.

① Click 'Servo OFF' button at the User Program(GUI).

② Give the drive a command through DLL library.

③ Assign 'Servo ON' to a control input pin, and supply the drive with the signal through the pin.

After Servo ON command is given, In-position is finished to the time as shown below.

't1' is the time until Servo ON command is given and then the position is decided. It is about 800 msec. It is subject to the rising time of supplying power and the motor status.

8.3 Operation Mode

This controller can do three control operations such as I/O command, communication command(DLL program), and User Program(GUI)

(1) I/O Command Mode

This controller can execute control operation like in-position by I/O command transmitted from the upper controller. The in-position control operation is executed by operating position table with I/O command.

(2) Communication Command Mode

This controller can execute control operation like in-position by command transmitted from the upper controller. The in-position control operation is executed by operating position table with I/O command

Position Table Operation Sequence

In case of Ezi-SERVO Plus-R, the system can execute continuous operation by position table at the I/O command mode.

① By using PT A0 ~ PT A7 input signal or DLL program, set PT number to be operated.
② In case of Servo OFF, set the controller to Servo ON by communication program or Servo ON control input.
③ Start to operate by rising edge of PT Start input signal or communication program.

Stopping Continuous Operation of Position Table

When the motor is executing continuous operation of position table with Ezi-SERVO Plus-R, stop executing position table by following methods.

① To use DLL program or control input signal corresponding to 'Stop' and 'E-Stop'. In this case, operation is completely finished and is not connected to next operation.
② The user can click 「Pause」 at User Program(GUI) to temporarily stop operating. In this case, click 「Pause」 again, and remaining operation will be executed again.

Speed Control Operation

To operate the motor by parameters set by User Program(GUI) or DLL program. (This is not connected with PT operation.)

Once speed control operation is started, PT operation command is overridden. Likewise, while PT operation is executing, speed control operation command is overridden.

The followings show parameters applied to speed control operation. All position table item values are overridden.

Parameter Name	Setting Content	Range
Axis Max Speed	Operation speed after acceleration is finished	1~500,000[pps]
Axis Start Speed	Operation start speed before acceleration starts	1~35,000[pps]
Axis Acc Time	Required time until the motor reaches the axis max speed from stop status	1~9,999[ms]
Axis Dec Time	Required time until the motor reaches from the axis max speed to the stop status	1~9,999[ms]
Motion Dir	To select motion direction (CW or CCW)	0~1
Pulse per Revolution	Number of pulses per revolution. The range of 'Axis Max Speed' parameter is depend on this value.	0~9

Teaching Function

Teaching can be executed only by User Program(GUI). For more information, refer to 「User Manual - Position Table Function」.

9. Other Operation Functions

9.1 Position Table(PT) Operation Example

Input 'PT A0~ PT A7' signals to set PT number. Input 'PT Start' number to execute speed control operation. For more information, refer to 「User Manual - Position Table Function」.

【Position Table Setting】

PT No.	Command type	Position	Low Speed	High Speed	Accel. time	Decel. time	Wait time	Continuous Action	JP Table No.
0	3	10000	0	2500	50	300	0	1	1
1	0	1000	500	-	-	-	0	1	2
2	3	5000	0	1500	50	300	300	0	3
3	3	-2500	0	1000	300	300	0	0	-

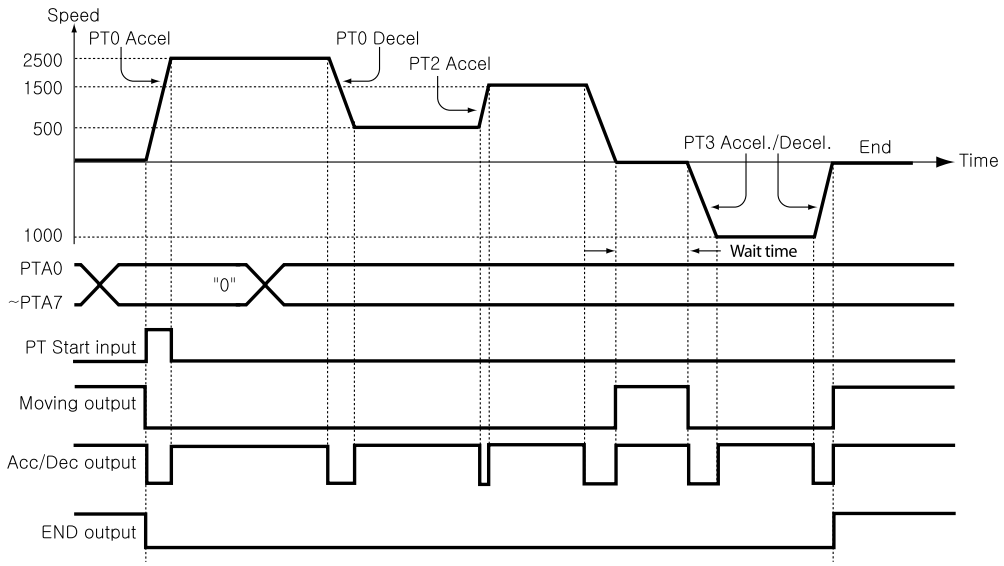

9.2 Jog Operation Example

The machine executes speed control operation at the speed set by parameters according to inputting 'Jog+' and 'Jog- ' signals.

【Parameter Setting】

No.	Parameter Name	Setting Value	Unit
6	Jog Speed	1500	[pps]
7	Jog Start Speed	100	[pps]
8	Jog Acc Dec Time	200	[msec]

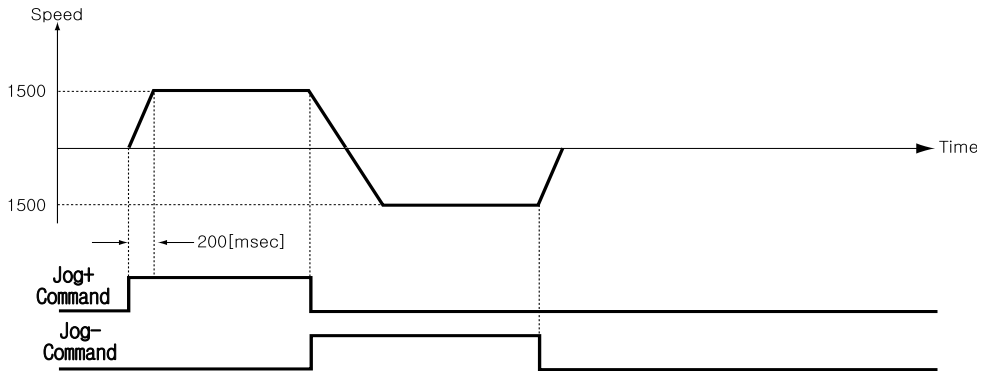

Also, when any value except 0 is set to the 'Jog Start Speed' parameter, the relation between jog command and in-position is shown below.

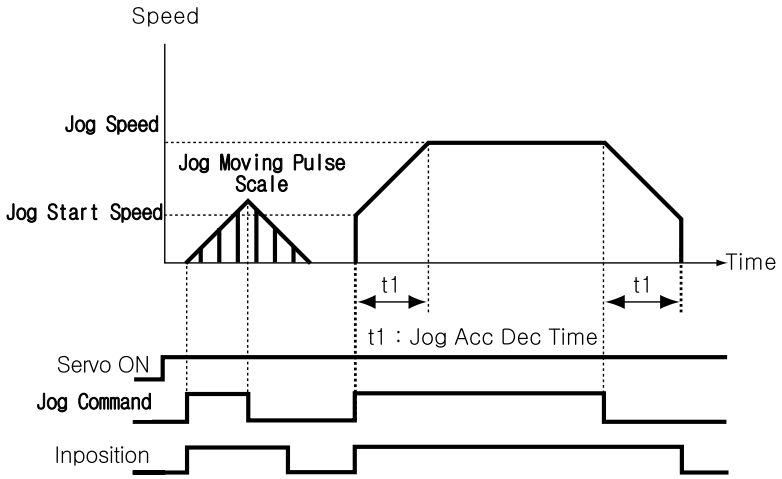

9.3 Origin Return

If the machine is operated by I/O signals, the motor can execute origin return by inputting 'Origin Search' signal. Also, the motor can execute origin return with User Program(GUI) and DLL program. The following table shows parameter types related to origin return.

Parameter Name	Description	Range
Org Speed	Operation speed when origin return starts	1~50,000[pps]
Org Search Speed	Low-speed operation speed after origin sensor is sensed	1~50,000[pps]
Org Acc Dec Time	The time assigned to the acceleration/deceleration section when origin return starts and stops.	1~9,999[ms]
Org Method	To select how to return the origin	0~3
Org Dir	To select operation direction(CW or CCW)	0~1
Org Offset	After origin return is finished, the motor moves additionally as this setting value and then stops.	-134,217,727 ~ 134,217,727
Org Position Set	After origin return is finished, 'Command Pos' value is set to this setting value.	-134,217,727 ~ 134,2177,27
Org Sensor Logic	To set the origin sensor signal level.	0~1
Org Torque Ratio	To set the torque ratio during Torque origin method	10~100[%]

(1) Origin Return Method Setting

To execute origin return, 'Org Method' parameter should be set as follows.

① Common Origin (In case of 'Org Method' = 0)

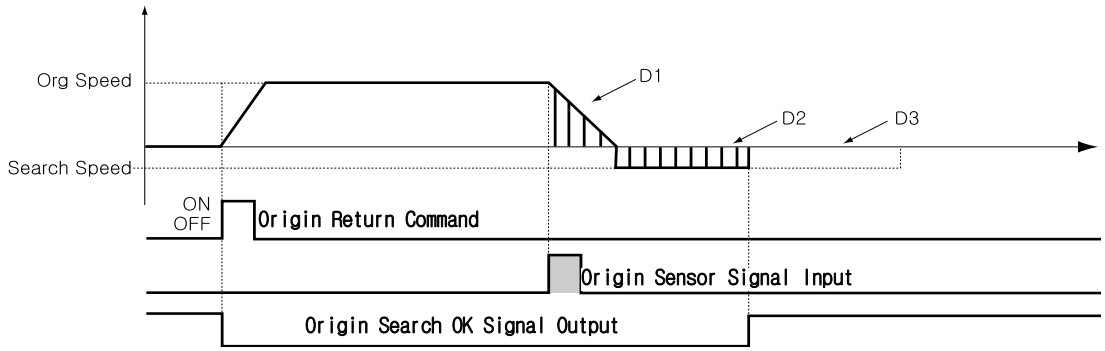

The machine moves up to the origin sensor by 'Org Speed' and 'Org Acc Dec Time' parameters and then finishes precise origin return at the low speed set to 'Org Search Speed'. The machine senses the origin sensor and moves as far as D1 and then stops. And the machine changes its moving direction and additionally moves as far as D2 and then stops. D1 and D2 are the same moving distance. If Org Offset parameter is not '0', the machine moves additionally as much as the parameter (ex: D3) and then stops. If the limit sensor is sensed while the machine is under origin return, the machine stops and reverses its moving direction and then continues to origin return operation.

② Z-pulse Origin (In case of 'Org Method' = 1)

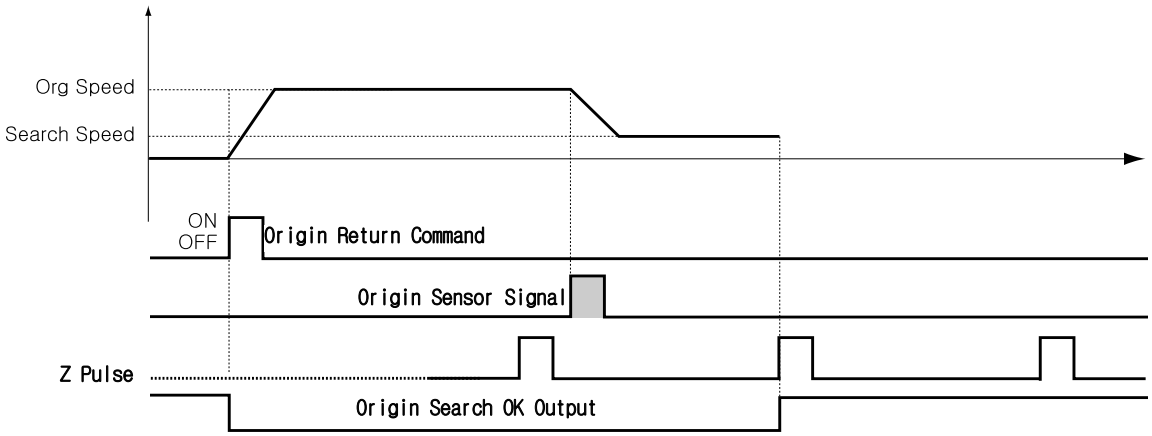

The machine moves up to the origin sensor by 'Org Speed' and 'Org Acc Dec Time' parameters and then finishes Z-pulse origin return at the low speed set to 'Org Search Speed'. That is, after the origin sensor is sensed, the machine moves slowly to the original moving direction until Z-pulse signal is sensed.

③ Limit Origin (In case of 'Org Method' = 2)

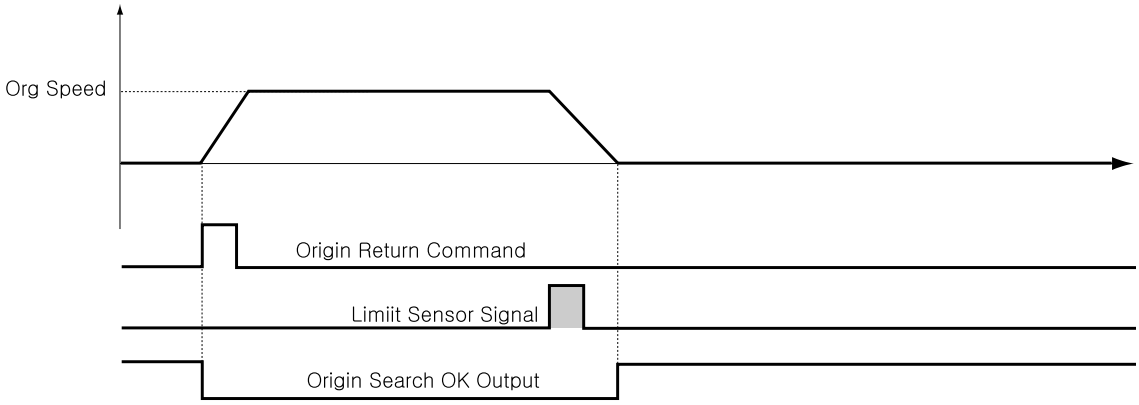

The machine moves up to the spot which the limit sensor is sensed by 'Org Speed' parameter, and stops by 'Org Acc Dec Time' value. The moving direction complies with as set in 'Org Dir'.
If there's no limit sensor on your system, you can set 'Origin' by 'S/W

Limit Plus Value' and 'S/W Limit Minus Value' of parameters.

④ Torque Origin (In case of 'Org Method'=3)

The machine moves up to the wall which the pushing torque is reached to 'Org Torque Ratio' value. This method can be used without origin sensor and without limit sensor.

(2) Origin Return Procedure

Origin return is executed to the following procedure.

① Set parameters required to origin return.

② If the Servo is OFF, (reset an alarm when it occurs) input a control input Servo ON command or send a communication program so that the Servo can be ON.

③ Start origin return operation to the rising edge of control input origin search or the communication program.

(3) Interruption of Origin Return

When the machine is under origin return, click 'Stop' or 'E-Stop' to stop the machine. In this case, the machine's origin is not edited and origin return is not finished either.

(4) Output of Origin Return Finish

The completion of origin return operation can be decided with related bit values of either 'Origin Search OK' of control output or 'Axis Status' of communication program.

9.4 Stop Operating

By using two methods of control input and communication program command, the user can input stop and emergency stop commands. Even though the emergency stop command is inputted, the Servo will be not OFF. In case emergency stop, the machine stops immediately without deceleration. So, a special caution for mechanical impact is required.

10. Communication Function

In case of RS-485, up to 16 axes can be controlled by the multi-drop link(daisy chain).

Caution	If Windows goes to the stand-by mode, serial communication is basically disconnected. So, after recovering from the stand-by mode, the user should connect communication again. This content is equally applied to the library provided with the product.

10.1 Connection with the PC

There are two methods of connecting the drive and the PC by RS-485(serial communication). PC's USB port or RS-232C port is used. By using following communication converters according to each communication type, the user can connect the PC and the drive module. The maximum communication speed is 115200[bps] with RS-232 to RS-485 converter.

RS-485 Converter (to USB)

RS-485 Converter (to RS-232)

For connection with the PC, refer to 「5.2 Controller Configuration」.

1) Cable of Connecting USB Port(to PC) and Converter(USB ↔ RS-485)

As illustrated right, universal USB A~A type cable is used.

2) Cable of Connecting RS232 Port (to PC) and Converter (RS233 ↔ RS-485)

Normally Power does not need to be supplied to the converter module. But when the communication have problems without power, DC 5~24V external power can connect. The signal is wired as follows.

PC Connector (DB-9 female)		Cable Connection	Converten Connector (DB-9 male)	
Pin Layot	Pin No		Pin No	Pin Layot
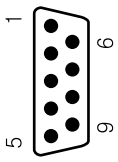	1 2 3 4 5 6 7 9 Frame GND		1 2 3 4 5 6 7 9 Frame GND	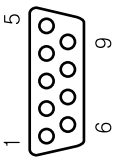

3) Cable of connecting RS-485 Converter and Drive Module(CN5)

Connector Type : RJ45
Cable Type : LAN cable, CAT5 or better (UTP or STP)
Signal Wiring : Standard Straight Wiring
(1↔1, 2↔2, 3↔3,…, 8↔8)

If multi-axis connection is required at one segment, up to 16 drive modules can be connected by the daisy-chain method. The pin signal content is as follows.

RJ45 Pin No.	UTP CAT5E cable	Function
1	White/Orange	GND
2	Orange	GND
3	White/Green	Data+
4	Blue	GND
5	White/Blue	GND
6	Green	Data-
7	White/Brown	GND
8	Brown	GND
case		Frame GND

Caution	The cable length of RS-485 Converter<->Drive or Drive<->Drive must be longer than 60 cm.

Caution	Signal cable 'Data+' and 'Data-' are differential type signals. These two signal cables must be twisted.

Caution	The connector fixed pin is connected to Frame GND through the mount hall of the PCB. At this time, it is recommended to use STP CAT5E cable.

10.2 Communication Interface Circuit

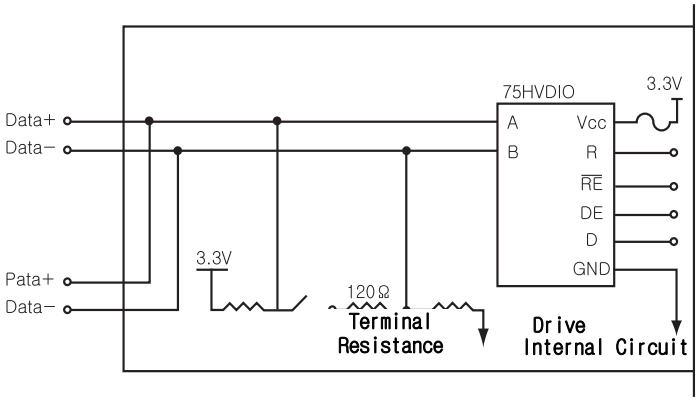

The above figure shows an I/O circuit of RS485 communication interface signal. When communication is connected, Ezi-SEVO Plus-R maintains the receive stand-by status. It performs sending only when it receives the signal from upper communication and then replies. For more information about communication function, refer to 「User Manual - Communication Function」 in a separate volume.

11. Protective Function

11.1 Alarm Type

When an alarm occurs while the controller is operating, a red LED among status display LEDs flash and the following protective function will be displayed according to flash count.

Alarm Table

Flash Count	Alarm Name	Description
1	Overcurrent	The current through power devices in inverter exceeds the limit value
2	Overspeed	Motor speed exceeds 3000[rpm].
3	Step out	The motor can not follow the command pulses.
4	Overload	The motor is continuously operated more than 5 second under a load exceeding the max. torque.
5	Overheat	The internal temperature of the drive exceeds 55℃.
6	Over regeneratived voltage	Back-EMF more than 70V.
7	Motor connection	The connection of drive and motor is defective.
8	Encoder connection	The connection of drive and encoder is defective.
9	Motor voltage error	The power supplied to the motor is less than 35V.
10	Inposition error	After operation is finished, a position error occurs.

11.2 Acquiring Alarm Information

When an alarm occurs, the motor become Servo OFF and then stops by free run and at the same time displays alarm message.

Also, 'AlarmBlink' signal repeats On/Off according to the timing as illustrated below. The red LED flash every 0.5 second in accordance with alarm number and wait for 2 seconds. And then red LED flash repeatedly until inputting 'AlarmReset' signal.

(Example) Alarm 3 : 'AlarmBlink' display signal occurred when the step-out is occur.

11.3 Alarm Release

If an alarm occurs, remove its cause and then release it. The alarm can be released as follows. In case of alarms of which 'Reset' column is indicated to 'Invalid', power must get downed prior to releasing the alarms.

Flash Count	Alarm Name	Description	Reset
1	Overcurrent	Check the mechanical status such as parameter setting, motor's short-circuit, or machine load (whether machine edge is collided), etc.	Valid
2	Overspeed	Check parameter setting, and abnormal operation of the motor.	Valid
3	Step out	Get down the load or increase the acceleration or deceleration speed.	Valid
4	Overload	Compare the motor's rating with load scale.	Valid
5	Overheat	Get down the ambient temperature or install a cooling fan.	Valid
6	Over regeneratived voltage	In case of high-speed operation, check if the acceleration or deceleration speed is low.	Valid
7	Motor connection	Check the connection status of drive and motor.	Invalid
8	Encoder connection	Check the connection status of drive and encoder.	Invalid
9	Motor voltage error	Check if power is supplied to the drive.	Invalid
10	Inposition error	Check if parameters are set correctly or the machine is over-loaded.	Valid

12. Parameter

12.1 Parameter List

No.	Name	Unit	Lower Limit	Upper Limit	Default
0	Pulse per Revolution		0	9	9
1	Axis Max Speed	[pps]	1	500,000	500,000
2	Axis Start Speed	[pps]	1	35,000	1
3	Axis Acc Time	[msec]	1	9,999	100
4	Axis Dec Time	[msec]	1	9999	100
5	Speed Override	[%]	1	500	100
6	Jog Speed	[pps]	1	500,000	5,000
7	Jog Start Speed	[pps]	1	35,000	1
8	Jog Acc Dec Time	[msec]	1	9,999	100
9	Servo Alarm Logic		0	1	0
10	Servo On Logic		0	1	0
11	Servo Alarm Reset Logic		0	1	0
12	S/W Limit Plus Value	[pulse]	-134,217,727	+134,217,727	+134,217,727
13	S/W Limit Minus Value	[pulse]	-134,217,727	+134,217,727	-134,217,727
14	S/W Limit Stop Method		0	1	1
15	H/W Limit Stop Method		0	1	1
16	Limit Sensor Logic		0	1	0
17	Org Speed	[pps]	1	500,000	5,000
18	Org Search Speed	[pps]	1	500,000	1,000
19	Org Acc Dec Time	[msec]	1	9,999	50
20	Org Method		0	2	0
21	Org Dir		0	1	0
22	Org Offset	[pulse]	-134,217,727	+134,217,727	0
23	Org Position Set	[pulse]	-134,217,727	+134,217,727	0
24	Org Sensor Logic		0	1	0
25	Position Loop Gain		0	15	4
26	Inpos Value		0	15	0
27	Pos Tracking Limit	[pulse]	0	+134,217,727	2,500
28	Motion Dir		0	1	0
29	Limit Sensor Dir		0	1	0
30	Org Torque Ratio	[%]	10	100	50

12.2 Encoder Setup

The setup of encoder can do in 'No.0 (Pulse per Revolution)' item on next table. Normally the resolution of encoder is 10000. If the resolution is 20000, 32000 or other value, you have to set '0' in parameter setup.

If you don't use default value for 'No.0 (Pulse per Revolution)', 'Position Error' can happen because of the function of Electronic Gear Ratio.

12.3 Parameter Description

<table>
<tr><th>No.</th><th>Description</th><th>Unit</th><th>Lower Limit</th><th>Upper Limit</th><th>Default</th></tr>
<tr><td>0</td><td>Pulse per Revolution :
Number of pulses per revolution.
If this value is changed, the motor is set to Servo OFF.
<table>
<tr><th>Value</th><th>Pulse/Revolution</th><th>Value</th><th>Pulse/Revolution</th></tr>
<tr><td>0</td><td>500 (20000, 320000, …)</td><td>5</td><td>3600</td></tr>
<tr><td>1</td><td>500</td><td>6</td><td>5000</td></tr>
<tr><td>2</td><td>1000</td><td>7</td><td>6400</td></tr>
<tr><td>3</td><td>1600</td><td>8</td><td>7200</td></tr>
<tr><td>4</td><td>2000</td><td>9</td><td>10000</td></tr>
</table></td><td></td><td>0</td><td>9</td><td>9</td></tr>
<tr><td>1</td><td>Axis Max Speed :
When position moving commands(absolute move, incremental move) are given, this mode sets the maximum speed which the motor can operate. So, the motor cannot be operated faster than this value in any case. This value is set to [pps] unit.</td><td>pps</td><td>1</td><td>500,000</td><td>500,000</td></tr>
<tr><td>2</td><td>Axis Start Speed :
When position moving commands(absolute move, incremental move) are given, this mode sets the operation start speed to [pps] unit.</td><td>pps</td><td>1</td><td>35,000</td><td>1</td></tr>
<tr><td>3</td><td>Axis Acc Time :
When position moving commands(absolute move, incremental move) are given, this mode sets the acceleration section of operation start segment to [msec] unit.
Possible range is different from Axis Speed.
(Ex.1) Axis Start Speed=1, Move Speed=400000 : 1~1430 [msec]
(Ex.2) Axis Start Speed=1, Move Speed=10000 : 1~350 [msec]</td><td>msec</td><td>1</td><td>9,999</td><td>100</td></tr>
<tr><td>4</td><td>Axis Dec Time :
When position moving commands(absolute move, incremental move) are given, this mode sets the deceleration section of operation stop segment to [msec] unit.
Possible range is different from Axis Speed same as ‘Axis Acc Time’ parameter</td><td>msec</td><td>1</td><td>9,999</td><td>100</td></tr>
<tr><td>5</td><td>Speed Override :
When position moving commands(absolute move, incremental move) are given, the operation speed is subject to the ratio set to ‘Move Speed’. (Ex) If current move speed is 10,000 and speed override is 200, actual motion speed is set to 20,000.</td><td>%</td><td>1</td><td>500</td><td>100</td></tr>
<tr><td>6</td><td>Jog Speed :
When jog position moving command is given, this mode sets the motor revolution value to [pps] unit.</td><td>pps</td><td>1</td><td>500,000</td><td>5000</td></tr>
<tr><td>7</td><td>Jog Start Speed :
When jog position moving command is given, this mode sets the operation start speed to [pps] unit.</td><td>pps</td><td>1</td><td>35,000</td><td>1</td></tr>
<tr><td>8</td><td>Jog Acc Dec Time :
In case of jog operation, this mode sets the time of acceleration and deceleration sections to [msec] unit.</td><td>msec</td><td>1</td><td>9,999</td><td>100</td></tr>
<tr><td>9</td><td>Servo Alarm Logic :
When the motor or the drive is defective and so alarm signal output is ON through CN1 connector, this mode sets the output signal level.
♦ 0 : 0 V (Active low level)
♦ 1 : 24V (Active high level)</td><td></td><td>0</td><td>1</td><td>0</td></tr>
<tr><td>10</td><td>Servo On Logic :
By using the input pin of CN1 connector, the drive may be converted into Servo ON. In this case, this mode sets the input signal condition so that the drive can be Servo ON.
♦ 0 : When 0 V (low level) is inputted, servo is set to ON.
♦ 1 : When 24V(high level) is inputted, servo is set to ON.</td><td></td><td>0</td><td>1</td><td>0</td></tr>
</table>

11	**Servo Alarm Reset Logic :** When the motor or the drive is defective and so an alarm occurs, this mode sets the input signal level to release the alarm signal. Before releasing the alarm signal, the user must release its cause. ♦ 0 : 0 V (Active low level) ♦ 1 : 24V(Active high level)		0	1	0
12	**S/W Limit Plus Value :** When position moving commands(absolute move, incremental move, jog) are given, this move set the maximum input limit that the motor can move to the plus(+) direction with 28 bits. When position reach to this value during 'Limit Origin', it will Be recognized to Origin.	pulse	-134,217,727	+134,217,727	+134,217,727
13	**S/W Limit Minus Value :** When position moving commands(absolute move, incremental move, jog) are given, this move set the minimum input limit that the motor can move to the minus(-) direction with 28 bits. When position reach to this value during 'Limit Origin', it will Be recognized to Origin.	pulse	-134,217,727	+134,217,727	-134,217,727
14	**S/W Limit Stop Method :** Sets how to stop the motor by SW Limit Plus/Minus Value', not stop motion by the limit sensor. ♦ 0 : stops the motor immediately by emergency stop mode. ♦ 1 : stops the motor gradually by soft stop mode.		0	1	1
15	**H/W Limit Stop Method:** In case of stop motion by the limit sensor, this mode sets how to stop the motor. ♦ 0 : stops the motor immediately by emergency stop mode. ♦ 1 : stops the motor gradually by soft stop mode.		0	1	1
16	**Limit Sensor Logic :** Sets the signal level so that the motor can recognize limit sensor's input to ON. ♦ 0 : 0 V (Active low level) ♦ 1 : 24V(Active high level)		0	1	0
17	**Org Speed :** In case of origin return command, this modes sets the operation speed until the motor senses the origin sensor to [pps] unit.	pps	1	500,000	5,000
18	**Org Search Speed :** In case of origin return command, The low operation speed for precise origin return after the motor senses the origin sensor is set to [pps] unit by this mode.	pps	1	500,000	1,000
19	**Org Acc Dec Time :** In case of origin return command, the acceleration/deceleration section time of the operation start/stop segment is set to [msec] unit by this mode.	msec	1	9,999	50
20	**Org Method :** The user can select origin return command types. ♦ 0 : The motor moves up to the origin sensor spot by 'Org Speed' and then executes precise origin return at the low value of 'Org Search Speed'. ♦ 1 : The motor moves up to the origin sensor spot by 'Org Speed' and then executes Z-pulse origin return at the low value of 'Org Search Speed'. ♦ 2 : The motor moves up to the limit sensor spot by 'Org Speed' and then immediately stops. ♦ 3 : The motor moves up to the wall by 'Org Torque Ratio' and then immediately stops. For more information, refer to '9.3 Origin Return'.		0	3	0
21	**Org Dir :** In case of origin return, this mode sets the revolution direction of the motor. ♦ 0 : moves the motor clockwise. ♦ 1 : moves the motor counterclockwise.		0	1	0

<table>
<tr><td>22</td><td>Org Offset :
After origin return is finished, the motor moves additionally as this setting value and then stops. ‘Command Pos/Actual Pos’ is set to ‘0’. If ‘Org Method’ is set to ‘2’, this value is ignored.</td><td>pulse</td><td>-134,217,727</td><td>+134,217,727</td><td>0</td></tr>
<tr><td>23</td><td>Org Position Set :
After origin return is finished, ‘Command Pos/Actual Pos’ value is set to this setting value.</td><td>pulse</td><td>-134,217,727</td><td>+134,217,727</td><td>0</td></tr>
<tr><td>24</td><td>Org Sensor Logic :
Sets the origin sensor signal level so that the motor can recognize origin sensor’s input to ON.
♦ 0 : 0 V (low level)
♦ 1 : 24V(high level)</td><td></td><td>0</td><td>1</td><td>0</td></tr>
<tr><td>25</td><td>Position Loop Gain :
After the motor stops, this mode controls the motor’s response by a load attached to the motor. The user can control this value by the motor’s load and so get the motor’s performance that responds fast and stably. Set this mode as follows.
1) Set the value to ‘0’.
2) Increase the value until the motor’s response is stabilized.
3) Preciously adjust the setting status by increasing/decreasing one or two steps the current setting value.
<table>
<tr><th>Value</th><th>Integral Part’s Time Constant*</th><th>Proportional Gain*</th><th>Value</th><th>Integral Part’s Time Constant*</th><th>Proportional Gain*</th></tr>
<tr><td>0</td><td>1</td><td>1</td><td>8</td><td>2</td><td>3</td></tr>
<tr><td>1</td><td>1</td><td>2</td><td>9</td><td>2</td><td>4</td></tr>
<tr><td>2</td><td>1</td><td>3</td><td>10</td><td>2</td><td>5</td></tr>
<tr><td>3</td><td>1</td><td>4</td><td>11</td><td>3</td><td>1</td></tr>
<tr><td>4</td><td>1</td><td>5</td><td>12</td><td>3</td><td>2</td></tr>
<tr><td>5</td><td>1</td><td>6</td><td>13</td><td>3</td><td>3</td></tr>
<tr><td>6</td><td>2</td><td>1</td><td>14</td><td>3</td><td>4</td></tr>
<tr><td>7</td><td>2</td><td>2</td><td>15</td><td>3</td><td>5</td></tr>
</table>
* The above value is not the actual value used inside the drive but the relative value.</td><td></td><td>0</td><td>15</td><td>4</td></tr>
<tr><td>26</td><td>Inpos Value :
Sets the output condition of the in-position finish signal. After position command pulse is finished, when the position deviation from target position is within ‘Inpos Value’, this mode displays in-position finish signal.
<table>
<tr><th>Value</th><th>In-position [pulse] Fast Response</th><th>Value</th><th>In-position [pulse] Accurate Response</th></tr>
<tr><td>0</td><td>0</td><td>8</td><td>0</td></tr>
<tr><td>1</td><td>1</td><td>9</td><td>1</td></tr>
<tr><td>2</td><td>2</td><td>10</td><td>2</td></tr>
<tr><td>3</td><td>3</td><td>11</td><td>3</td></tr>
<tr><td>4</td><td>4</td><td>12</td><td>4</td></tr>
<tr><td>5</td><td>5</td><td>13</td><td>5</td></tr>
<tr><td>6</td><td>6</td><td>14</td><td>6</td></tr>
<tr><td>7</td><td>7</td><td>15</td><td>7</td></tr>
</table></td><td></td><td>0</td><td>15</td><td>0</td></tr>
</table>

	Fast response and accurate response can be controlled as illustrated below. 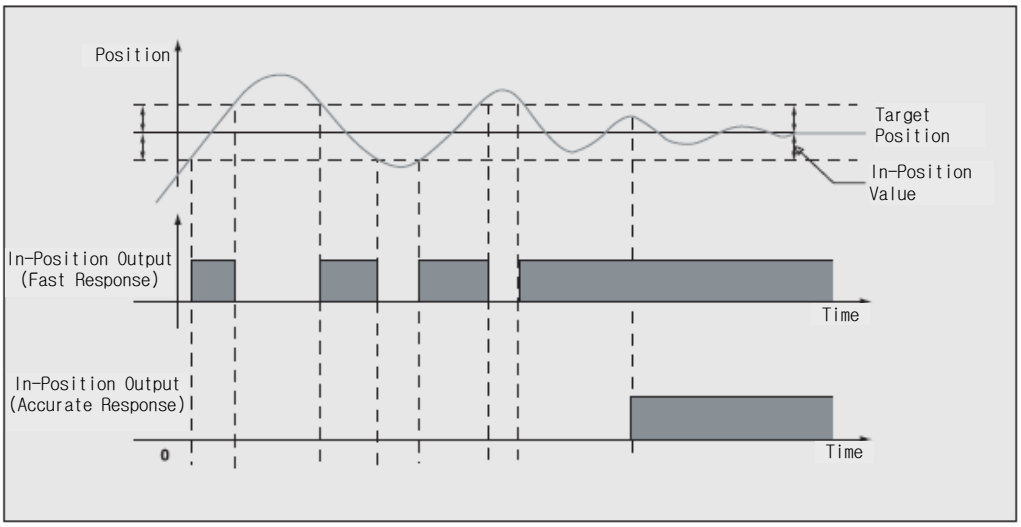 				
27	**Pos Tracking Limit :** Acts to protect the motor and the drive. While the motor stops and is set to Servo ON, when 'Position Error' is greater than this setting value, this mode generates an alarm to stop a flow of electricity to the motor and then set it to Servo OFF.	pulse	0	+134,217,727	2,500
28	**Motion Dir :** When the motor operates by position command, this mode sets the revolution direction of the motor. ♦ 0 : moves the motor clockwise. ♦ 1 : moves the motor counterclockwise. If this parameter is changed, normally 'Limit Sensor Dir' is also changed.		0	1	0
29	**Limit Sensor Dir :** Sets the limit sensor direction to stop the motor to the limit spot under operation. ♦ 0 : When operation direction is 'CW', input the sensor signal to the Limit+ direction, and the motor will stop. ♦ 1 : When operation direction is 'CW', input the sensor signal to the Limit− direction, and the motor will stop. If this parameter is changed, normally 'Motion Sensor Dir' is also changed.		0	1	0
30	**Org Torque Ratio :** This parameter can be used only when 'Origin Method' is '3'. To set the maximum torque value to stop the motor with some material(wall)	%	10	100	50

Appendix

Option for RS-485 Communication

■ RS485 Converter

Available to communicate the PC and the drive. One module per multi-drop link is required.

Type	Item	Max comm. Speed [bps]	External Power
RS485 to USB	FAS-RCV	921,600	No need
RS485 to RS232	FAS-RCR	115,200	No need (5~24VDC optional)

FAS-RCR

FAS-RCV

■ USB Connection Cable for FAS-RCV

Universal USB A-A type cable is used.

Item	Length	
CGNR-U-1R8F	1.8m	
CGNR-U-003F	3m	
CGNR-U-005F	5m	

■ RS232 Connection Cable for FAS-RCR

Universal DB-9 male-female type cable is used.

Item	Length	
CGNR-C-1R8F	1.8m	
CGNR-C-003F	3m	
CGNR-C-005F	5m	

For more information wiring diagram and connector, refer to 「10. Communication Function」.

■ Rs-485 Connection Cable

Universal RJ-45 (STP:CAT5 category) straight type cable is used.

Item	Length
CGNR-R-0R6F	60cm
CGNR-R-001F	100cm
CGNR-R-1R5F	150cm
CGNR-R-002F	200cm
CGNR-R-003F	300cm
CGNR-R-005F	500cm

For more information wiring diagram and connector, refer to 「10. Communication Function」.

For cabling position, refer to ⑤ of 「5.2 Controller Configuration」.

Option for Interface Board

■ Terminal Block

Type	Item	
Interface (Terminal Block) Board	TB-Plus	

No. of CN1	Signal name	Signal name of TB-Plus
1	Limit+	L+
2	Limit-	L-
3	Origin	ORI
4	IN1	I1
5	IN6	I6
6	IN7	I7
14	IN2	I2
15	IN3	I3
16	IN4	I4
17	IN5	I5
18	IN8	I8
19	IN9	I9

No. of CN1	Signal name	Signal name of TB- Plus
7	COMP	CO
8	OUT1	O1
9	OUT2	O2
10	OUT3	O3
11	OUT4	O4
12	OUT5	O5
13	OUT6	O6
20	OUT7	O7
21	OUT8	O8
22	OUT9	O9
23	Brake+	B+
24	Brake-	B-

■ Extension cable for Interface Board

Available to extend the distance between the terminal block board and the drive.

Item	Length[m]	Remark
CIFD-S-□□□F	□□□	Normal Cable
CIFD-S-□□□M	□□□	Robot Cable

□ is for Cable Length, The unit is 1m and Max, 20m length,

The cable connection is 1:1 straight type.

Use	Item	Specification	Maker
Terminal Block connector	Connector	DB-26 male type	
Drive connector(CN1)	Connector Housing Backshell	10126-30000VE 10320-52A0-008	3M 3M

Option for Motor Drive

■ Cable for Input/Output Signal

Available to connect between Control System and Ezi-SERVO Plus-R.

Item	Length[m]	Remark
CSVR-S-□□□F	□□□	Normal Cable
CSVR-S-□□□M	□□□	Robot Cable

□ is for Cable Length. The unit is 1m and Max. 20m length.

Refer to ① of 「5.2 Controller Configuration」.

■ Cable for Power

Available to connect between Power and Ezi-SERVO Plus-R.

Item	Length[m]	Remark
CSVO-P-□□□F	□□□	Normal Cable
CSVO-P-□□□M	□□□	Robot Cable

□ is for Cable Length. The unit is 1m and Max. 2m length.

Next is for 86mm drive.

Item	Length[m]	Remark
CSVP-P-□□□F	□□□	Normal Cable
CSVP-P-□□□M	□□□	Robot Cable

□ is for Cable Length. The unit is 1m and Max. 2m length.

Refer to ④ of 「5.2 Controller Configuration」.

■ Extension Cable for Motor

Available to extended connection between motor and Ezi-SERVO Plus-R.

Item	Length[m]	Remark
CSVO-M-□□□F	□□□	Normal Cable
CSVO-M-□□□M	□□□	Robot Cable

□ is for Cable Length. The unit is 1m and Max. 20m length.

Next is for 86mm drive.

Item	Length[m]	Remark
CSVP-M-□□□F	□□□	Normal Cable
CSVP-M-□□□M	□□□	Robot Cable

□ is for Cable Length. The unit is 1m and Max. 20m length.

Refer to ③ of 「5.2 Controller Configuration」.

Wiring Diagram

Drive Connector(CN3)		Cable Connection	Motor Connector	
Pin Layout	Pin No.		Pin No.	Pin Layout
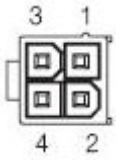	1 2 3 4		1 2 3 4	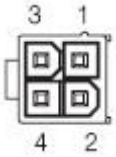

Connector Specification

Item	Specification	Maker
Housing	5557-04	MOLEX
Terminal	5556	MOLEX

■ Extension cable for Encoder

Available to extend the distance between the encoder and Ezi-SERVO Plus-R.

Item	Length[m]	Remark
CSVO-E-□□□F	□□□	Normal Cable
CSVO-E-□□□M	□□□	Robot Cable

□ is for Cable Length. The unit is 1m and Max. 20m length.

Refer to ② of 「5.2 Controller Configuration」.

Wiring Diagram

Drive Connector(CN2)		Cable Connection	Motor Connector	
Pin Layout	Pin No.		Pin No.	Pin Layout
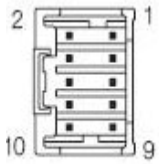	1 2 3 4 5 6 7 8 9		1 2 3 4 5 6 7 8 9	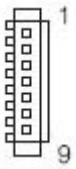

Connector Specification

Type	Item	Specification	Maker
Drive Connector (CN2)	Housing Terminal	51353-100 56134-9000	MOLEX MOLEX
Motor Connector	Housing Terminal	SMP-09V-NC SHF-001T-0.8BS	JST JST

■ Connector for cabling

These connectors are serviced together with Ezi-SERVO Plus-R except when purchasing option cables.

CN1 : Input/Output Connector

Item	Specification	Maker
Connector	10126-3000PE	3M
Shell	10326-52F0-008	3M

CN2 : Encoder Connector

Item	Specification	Maker
Housing	51353-1000	MOLEX
Terminal	56134-9000	MOLEX

CN3 : Motor Connector

Item	Specification	Maker
Housing	5557-04	MOLEX
Terminal	5556	MOLEX

CN4 : Power Connector

Item	Specification	Maker
Housing	5557-02	MOLEX
Terminal	5556	MOLEX

CN3 : Motor Connector
(86mm motor drive only)

Item	Specification	Maker
Terminal Block	AK950-4	PTR

CN4 : Power Connector
(86mm motor drive only)

Item	Specification	Maker
Terminal Block	AK950-2	PTR

FASTECH Co., Ltd.

Rm #1403, Bucheon Technopark 401 Dong,
Yakdae-dong, Wonmi-Gu, Bucheon-si,
Gyeonggi-do, Rep. Of Korea(Zip:420-734)
TEL : 82-32-234-6300
FAX : 82-32-234-6302
Email : fastech@empal.com
Homepage : www.fastech.co.kr

● Please note that the specifications are subject to change without notice due to product improvements.

ⓒ Copyright 2008 FASTECH Co.,Ltd.
All Rights Reserved. Aug 05, 2009 rev.05.01.03